Naval Education and Training Command

NAVEDTRA 131B
November 2010

Support Manual for
MIL-HDBK-1379-2A

PERSONNEL PERFORMANCE PROFILE BASED CURRICULUM DEVELOPMENT MANUAL VOLUME II SAMPLE PRODUCTS

DISTRIBUTION STATEMENT A: Approved for public release; distribution is unlimited.

DEPARTMENT OF THE NAVY
COMMANDER
NAVAL EDUCATION AND TRAINING COMMAND
250 DALLAS STREET
PENSACOLA, FLORIDA 32508-5220

1500
Ser N00/514
NOV 15 2010

LETTER OF PROMULGATION FOR NAVEDTRA 131B

1. This guidance manual has been extensively revised. Most of the revisions are in response to user comments and reflect a continuing effort to increase the manual's utility to the training field. NAVEDTRA 131B, Volumes I-III, supersedes and replaces NAVEDTRA 131A, dated: July 1997.

2. The procedures in this manual follow a Personnel Performance Profile (PPP) Based Curriculum Development method. This manual is intended for use by military, civil service, and contractor personnel engaged in Navy training materials development and modification.

3. Procedural guidance for development of training materials following a Task based method is published in NAVEDTRA 130 (series).

4. This publication is available electronically at: Navy Knowledge Online (NKO) - NETC N74 Learning Standards Homepage; and Navy Marine Corps Intranet's (NMCI) Total Records and Information Management (TRIM).

5. Corrections and comments concerning this manual are invited and should be addressed to the Naval Education and Training Command, attention: N7.

6. Reviewed and approved.

J. F. KILKENNY

TABLE OF CONTENTS

Title		Page Number
TAB A-1	Training Project Plan	A-1-1
TAB A-2	Personnel Performance Profiles	A-2-1
TAB A-3	Training Path System	A-3-1
TAB A-4	Training Course Control Document	A-4-1
TAB A-5	Lesson Plan	A-5-1
TAB A-6	Trainee Guide	A-6-1
TAB A-7	Test Package	A-7-1
TAB A-8	Pilot Course Monitoring Report	A-8-1
TAB A-9	Exercise Controller Guide, not supported by a Lesson Plan	A-9-1
TAB A-10	Exercise Controller Guide, supported by a Lesson Plan	A-10-1

TAB A-1

TRAINING PROJECT PLAN

TRAINING PROJECT PLAN

FOR

Gun Computer System (GCS) MK 160 MOD 8/Optical Sight System (OSS) MK 46 MOD 1 Differences Course

A-113-0125

PREPARED FOR

Commander, Center for Surface Combat Systems (CSCS) Dahlgren

5395 First St. Dahlgren, VA 22448

PREPARED BY

PEO IWS3C

Crystal Center, 2450 Crystal Drive, Arlington, VA 22202-3843

April 2006

TABLE OF CONTENTS

Contents **Page**

Course Data 3

Justification for Course 5

Safety Risks and Hazardous Materials 5

Curriculum Development Method 6

Resource Requirements 7

Compensation 15

Milestones 16

TRAINING PROJECT PLAN

A. COURSE DATA

CIN: A-113-0125

X			
New	Revision	Modification	Cancellation

CDP (s)	Training Site (s)
1. 582L	Center for Surface Combat Systems (CSCS) Learning Detachment, Dam Neck 1912 Regulus Ave. Virginia Beach, VA 23461-2098

Course Status: The Gun Computer System (GCS) MK 160 MOD 8/Optical Sight System (OSS) MK 46 MOD 1 Differences Course (A-113-0125) is currently in a DRAFT status pending the Pilot Convening at Center for Surface Combat Systems (CSCS) Learning Detachment, Dam Neck, VA. Current throughput is being managed by "Factory Training".

Course length extended from 80 training hours (12 calender days) to 120 training hours (19 calender days) to support the incorporation of Gun Computer System Pre-Faulted Modules into Factory Training.
Reference: Video TeleConference (VTC) with Moran, Katherine A LT CSCS Dahlgren, Code N32,
03 FEB 06

All deltas regarding Pre-Faulted Modules and technical documentation will be resolved prior to Course Pilot scheduled for 6 NOV 06.

Course Mission Statement: To train E4-E8 Fire Controlmen the Operation and Maintenance on the Gun Computer System (GCS) MK 160 MOD 8 and Optical Sight System (OSS) MK 46 MOD1 differences at the Journeyman Level on DDG-81and newer hulls both import and underway with minimal supervision.

Occupational Classification/Prerequisites: Occupational Classification - NEC FC-1139 will be awarded upon successful completion of the training.

Prerequisites:

1. Successful completion of the GCS MK 160 MOD 4&6/OSS MK 46 MOD 0 Operation and Maintenance Course (A-113-0131) (FC-1120)

2. Rating: Fire Controlman

3. Paygrade: E4 to E7

Course Overview

The Gun Computer System (GCS) MK 160 MOD 8/Optical Sight System (OSS) MK 46 MOD 1 Differences Course (A-113-0125) is designed to provide the knowledge and practical skills necessary for FC-1139 personnel to operate and maintain these two systems on board DDG-51 class ships and at sites ashore. In support of this objective, the differences course will contain theory, operation, preventive and documented corrective maintenance instruction for the following systems:

1. Gun Weapon System (GWS) MK 34 MOD 1
2. Gun Computer System (GCS) MK 160 MOD 8
3. Gun Console (GC) OJ-719(V)/UYQ-70(V)
4. Recorder-Reproducer (RCRP) MK 27 MOD 1
5. Gun Console Computer (GCC) AN/UYK-44(V) Enhanced Processor/Open System Module (EP/OSM) with Expansion Adapter Group (EAG) OF-174(V)
6. Gun Mount Processor (GMP) AN/UYK-44(V) (EP/OSM)
7. Gun Mount Control Panel (GMCP) MK 437 MOD 1
8. Optical Sight System (OSS) MK 46 MOD 1

All preventive maintenance will be taught in accordance with established PMS requirements and guidelines.

All corrective maintenance will be taught and performed in accordance with documented/published procedures.

Manning Compensated from A-113-0131

71810	0839 623	FC1

MCRF Requirements

	GRAD	REQ	PLAN
FYO6	32	32	32
FY07	25	25	25
FY08	21	21	21
FY09	21	21	21
FY10	21	21	21

Training Site(s) Summary:

1. **Center for Surface Combat Systems (CSCS) Learning Detachment, Dam Neck**

	Course Length	Class Min Capacity	Class Max Capacity	Class Convenings	Average on Board	Student Throughput
Current:	0	0	0	0	0.00	0
Planned:	19	1	10	4	2.08	40

B. JUSTIFICATION:

1. Reference:

Navy Training Plan (NTP) S-30-8703E, Gun Weapon System (GWS) MK 34 MODs 0-4.

2. Reason/Source of Information:

This Training Project Plan (TPP) describes the course development for the Gun Computer System (GCS) MK 160 MOD 8/Optical Sight System (OSS) MK 46 MOD 1 for differences information and practical application. The following establishes the need for the differences course development:

A. The GCS MK 160 MOD 8 is installed as the gun fire control computer system as part of the Gun Weapon System (GWS) MK 34 MOD 1 on board DDGs 81 through 90.

B. The OSS MK 46 MOD 1 is installed as the electro-optic sensor as part of the Gun Weapon System (GWS) MK 34 MOD 1 on board DDGs 85 through 112.

3. Impact If Not Approved:

Failure to develop the three week GCS MK 160 MOD 8/OSS MK 46 MOD 1 Differences Course would inhibit the provision of baseline knowledge and practical application skills necessary for FC-1139 personnel to perform operation and maintenance for GCS MK 160 MOD 8/OSS MK 46 MOD 1 equipment in support of shipboard and land-based operations.

C. SAFETY RISKS AND HAZARDOUS MATERIALS:

This course is not designated "high-risk". Safety and supervisory procedures shall be maintained at a level that ensures training is conducted in a safe manner while providing the realism required to fulfill fleet operational and maintenance requirements, within practical limits.

D. CURRICULUM DEVELOPMENT METHOD:

1. Curriculum will be developed in accordance with NAVEDTRA 131 (A).

2. The documents that will be produced for this course will be as follows:
   - X a. Training Project Plan
   - X b. Personnel Performance Profile
   - X c. Training Path System
   - X d. Training Course Control Document
   - X e. Lesson Plan
   - X f. Trainee Guide
   - X g. Test Package
   - * X h. Support Materials

* Not produced by AIM I

3. The primary mode of instruction:

   The primary mode of instruction will be group-paced consisting of classroom lecture and laboratory learning experiences with Job Sheets for Preventive and documented Corrective Maintenance Training. The trainee will be guided by the instructor during performance of all Job Sheets to allow for maximum acquisition of knowledge and skills.

E. RESOURCE REQUIREMENTS:

SITE: Center for Surface Combat Systems (CSCS) Learning Detachment, Dam Neck
CPATS Document #: Not used - Leave Blank
Cost Account Code: 3456

Manpower

	FY2006	FY2007	FY2008	FY2009	FY2010
Enlisted Billets Required	1	1	1	1	1
Billets Authorized	0	1	1	1	1
Billets Compensated	1	0	0	0	0
Billets Available	0	0	0	0	0
Delta	1	0	0	0	0

Notes

FY06 compensated from A-113-0131.
FY07-10 anticipate billet gain.

Funding

Approp	AG/SAG	Expense	FY2006	FY2007	FY2008	FY2009	FY2010
OM&N	3K/1K	Y	$240	$290	$340	$390	$440

Facilities

1. Facility requirements for GCS MK 160 MOD 8/OSS MK 46 MOD 1 technical Training Equipment (TTE) shall be in accordance with Equipment Facilities Requiment No. S01947. Facility requirements for OSS MK 46 MOD 1 TTE shall be in accordance with EFR No. S_EFR_529_02002.

2. Point of Contact:

Naval Surface Warfare Center Port Hueneme Division, Louisville Detachment
Ms. Kimberly Bischoff, Logistics Manager
160 Rochester Dr.
Louisville, Kentucky 40214-2681
(502) 364-5383
kimberly.bischoff@navy.mil

SITE: Center for Surface Combat Systems (CSCS) Learning Detachment, Dam Neck

Site Consideration:

Equipment

No.	Type/Nomenclature	Part Number	COG/NIIN/SMIC	QTY REQ'D	QTY O/H	QTY Short	U/I	Unit Cost	CAGE Code	SM&R Code	Technical Reference
1.	Above Deck Sensor Unit MK 85 MOD 1 (p/o OSS MK 46 MOD 1)	006040518		1	1	0	EA		34228		SW210-A1-MMO-010/020
2.	Command and Decision Console OJ-719(V)/UYQ-70(V) (p/o GCS MK 160 MOD 8)	7244436		1	1	0	EA	$275,000.00	53711		SE686-CA-MMO-050
3.	Control and Display Console (CDC) MK 132 MOD 2 (p/o OSS MK 46 MOD 1)	006040525		1	1	0	EA		34228		SW210-A1-MMO-010/020
4.	Gun Computer System (GCS) MK 160 MOD 8	No Number		1	1	0	zEA		53711		SW224-A8-MMO-010
5.	Gun Console Computer (GCC) AN/UYK-44(V) (EP/OSM) with Expansion Adapter Group (EAG) OF-174(V) (p/o GCS MK 160 MOD 8)	7221614-01		1	1	0	EA	$495,000.00	81349		SW224-A8-MMO-010, SE610-PV-MMO-010, SE610-PV-SUP-030
6.	Gun Mount Control Panel (GMCP) MK 437 MOD 1	7244531		1	1	0	EA	$70,000.00	53711		SW224-A8-MMO-010
7.	Gun Mount Processor (GMP) AN/UYK-44(V) (EP/OSM) (P/o GCS MK 160 MOD 8	7221614-01		1	1	0	EA	$335,000.00	81349		SW224-A8-MMO-010
8.	Optical Sight System (OSS) MK 46 MOD 1	0-006040005		1	1	0	EA	$1,700,000.00			SW210-A1-MMO-010/020
9.	Power Supply (PS) MK 177 MOD 1 (p/o OSS MK 46 MOD 1)	006040535		1	1	0	EA		34228		SW210-A1-MMO-010/020
10.	Recorder Reproducer (RCRP) MK 27 MOD 1 (p/o GCS MK 160 MOD 8)	7244867-1		1	1	0	EA	$120,000.00	53711		SW224-AA-MMO-010

11. Safety Switch S1 (p/o OSS MK 46 MOD 1)	071449		1	1	0	EA		34228		SW210-A1-MMO-010/020
12. Stabilization and Electronics Unit (SEU) MK 104 MOD 1 (p/o OSS M K46 MOD 1)	00604A666		1	1	0	EA		34228		SW210-A1-MMO-010/020

Hand Tools

No.	Type/Nomenclature	Part Number	COG/NIIN/SMIC	QTY REQ'D	QTY O/H	QTY Short	U/I	Unit Cost	CAGE Code	SM&R Code	Technical Reference
1.	General Purpose Hand Tools	N/A		1	0	1		$150.00	53711		N/A

Prefaulted Modules

No.	Type/Nomenclature	Part Number	COG/NIIN/SMIC	QTY REQ'D	QTY O/H	QTY Short	U/I	Unit Cost	CAGE Code	SM&R Code	Technical Reference
1.	S1277 #1 (GMCP) Failed Power Supply, Gun Mount Control Panel (GMCP) MK 437 MOD 1	20010006-015		1	0	1	EA		54779	PAOD D	SW224-A8-MMO-010
2.	S1277 #2 (GMCP) Failed Velocimeter Faile-Safe CCA	7625460	5998-01-525-9124	1	0	1	EA	$2,000.00	53711	PAOD D	SW224-A8-MMO-010
3.	S1277 #3 (GMCP) Failed Indicating Fuze Holder	FHL32W-11	5920-00-065-9251	1	0	1	EA	$80.00	84613	PAOD D	SW224-A8-MMO-010
4.	S2789 #1 (OSS) Failed OSS CPU 2A1A3A1A9	6937022		1	0	1	EA	$3,000.00	53711	PAOD D	SW210-A1-MMO-010
5.	S2789 #2 (OSS) Failed Relay Driver CCA 3A1	6939846		1	0	1	EA	$9,000.00	53711	PAOD D	SW210-A1-MMO-010
6.	S2789 #3 (OSS) Failed Encoder CCA 2A1A3A1A15	6936847	5998-01-531-2658	1	0	1	EA	$5,000.00	53711	PAOD D	SW210-A1-MMO-010
7.	S2789 #4 (OSS) Disable F/O Transmitter 4A2, 3, 4, or 5 Fault Insertion Technique	N/A	N/A	1	1	0	N/A		N/A	N/A	SW210-A1-MMO-010
8.	S2789 #5 (OSS) Disable Safety Switch Connector S1J1 Fault Insertion Technique	N/A	N/A	1	1	0	N/A		N/A	N/A	SW210-A1-MMO-010

9.	S2789 #6 (OSS) Fuze Failure for PS MK 177 MOD 1 Test Panel Fault Insertion Technique	N/A	N/A	1	1	0	N/A		N/A	N/A	SW210-A1-MMO-010
10.	S2805 #1 (GCC) Failed Fiber Distributed Data Interface CCA	5211-DAS-ST-1M		1	0	1	EA		2V643	PAOD D	SW224-A8-MMO-010
11.	S2805 #2 (GMP) Failed VME-IOC CCA Fault Insertion Technique	N/A	N/A	1	0	1	N/A	$0.00	N/A		SW224-A8-MMO-010
12.	S2805 #3 (GCC) Failed Clock Re-Driver CCA	7365072		1	0	1	EA			PAOD D	SW224-A8-MMO-010
13.	S2805 #4 (GMP) Failed SCRAMNet CCA	H-AS-D6VME 04M-02		1	0	1	EA			PAOD D	SW224-A8-MMO-010
14.	S2805 #5 (GCC) Failed Motorola 2600 Single Board Computer (SBC) CCA	7244868-02		1	0	1	EA		53711	PAOD D	SW224-A8-MMO-010
15.	S2805 #6 (GMP) Failed Enhanced Processor (EP)/VME CCA	7372452-17		1	0	1	EA		90536	PAOD D	SW224-A8-MMO-010
16.	S3399 #1 (Gun Console) Disabled SCSI Cable Interface Fault Insertion Technique	N/A	N/A	1	1	0	N/A		N/A	N/A	SE686-CA-MMO-050, SE686-CL-MMO-030
17.	S3399 #2 (Gun Console) Disable CB1 Fault Insertion Technique	N/A	N/A	1	1	0	N/A		N/A		SE686-CA-MMO-050, SE686-CL-MMO-030
18.	S3706 #1 (RCRP) Failed Isolation Transformer to DCC Power Cable			1	1	0	EA	$20.00	53711	PAOD D	SW224-AA-MMO-010
19.	S3706 #2 (RCRP) Failed Data Storage Set (DSS) Power Supply	709SZ005-02	6130-01-448-1139	1	0	1	EA	$2,300.00	51398	PAOD D	SW224-AA-MMO-010
20.	S3706 #3 (RCRP) Failed Ethernet Tee Connector	BN23	9N 5935-01-495-3088	1	0	1	EA	$4.00	3SCL2	XBOZZ	SW224-AA-MMO-010

References

No.	Number	Title	Supplier	QTY REQ'D	QTY O/H	QTY Short
1.	MIP 4801/006 OPNAVINST 4790 (Series)	Preventive Maintenance Requirements for Gun Weapon System (GWS) MK 34 MOD 0 & 1	Naval Sea Systems Command	1	1	0
2.	MIP 4813/007 OPNAVINST 4790 (Series)	Preventive Maintenance for Optical Sight System (OSS) MK 46 MOD 0 & 1	Naval Sea Systems Command	1	1	0
3.	MIP 4813/008 OPNAVINST 4790 (Series)	Preventive Maintenance for Gun Computer System (GCS) MK 160 (MOD)	Naval Sea Systems Command	1	1	0
4.	OPNAVINST 5510.10 (Series)	Information and Personnel Security Program Regulation	Naval Sea Systems Command	1	1	0
5.	SE610-PV-MMO-010	Organizational Level Maintenance for Data Processing Set (DPS) AN/UYK-44(V)	NSWCPHD-L	12	12	0
6.	SE610-PV-SUP-030	Technical Manual Supplement for Data Processing Set (DPS) AN/UYK-44(V)	NSWCPHD-L	12	12	0
7.	SE686-CA-MMO-050	Maintenance Manual for Command and Decision Console OJ-719(V)/UYQ-70(V)	NSWCPHD-L	12	12	0
8.	SE686-CL-MMO-030	Technical Manual for Command and Decision Console OJ-719(V)11/UYQ-70	NSWCPHD-L	12	12	0
9.	SW210-A1-MMO-010	Technical Manual Optical Sight System MK 46 MOD 1	NSWCPHD-L	12	12	0
10.	SW210-A1-MMO-020	Technical Manual Optical Sight System MK 46 MOD 1	NSWCPHD-L	12	12	0
11.	SW221-A1-MMO-010	Maintenance Manual for Gun Weapon System MK 34 MOD 1	NSWCPHD-L	12	12	0
12.	SW224-A8-MMO-010	Maintenance Manual for Gun Computer System MK 160 MOD 8	NSWCPHD-L	12	12	0
13.	SW224-AA-MMO-A10	Technical Manual for Recorder Reproducer MK 27 MOD 1	NSWCPHD-L	12	12	0

Software

No.	Title	Number	Version	Vendor	Type	Cost	Reference	QTY REQ'D	QTY O/H	QTY Short
1.	Gun Computer System (GCS) MK 160 MOD 8 Operational Program	PGM 0819				$330.00	SW224-A8-MMO-010	2	2	0
2.	Gun Computer System MK 160 MOD 8 VxWorks Operating System	PGM 0807				$330.00	SW224-A8-MMO-010	2	2	0
3.	Gun Computer System Training Facility (GCSTF) Operational Program	PGM 0824				$330.00		2	2	0
4.	Gun Mount Interface Tester (GMIT) Operational Program	PGM 0823				$330.00		2	2	0

5.	Naval Surface Fire Support Embedded Trainer (NSFSET) Operational Program	PGM 0854	$330.00	SW224-A8-GYD-060	2	2	0
6.	Optical Sight System (OSS) MK 46 MOD 1 Operational Program	PGM 0834	$1,000.00	SW210-A1-MMO-010	2	2	0
7.	Optical Sight System (OSS) MK 46 MOD 1 VxWorks Operating System	PGM 0807	$500.00	Resident on Motorola 2604 variants of the 2A1A3A1A9 Central Processor CCA. Being phased out.	2	2	0
8.	Optical Sight System (OSS) MK 46 MOD 1 VxWorks Operating System	PGM 0838	$500.00	Resident on Motorola 270X-Series 2A1A3A1A9 Central Processor CCAs. Phase in beginning with DDG 90.	2	2	0
9.	Optical Sight System MK 46 MOD 1 X-Windows Display Manager	PGM 0840	$500.00	SW210-A1-MMO-010	2	2	0
10.	Recorder Reproducer Set (RCRP) MK 27 MOD 1 Operational Program	PGM 0829	$330.00	SW224-AA-MMO-010	2	2	0

Support Equipment

No.	Type/Nomenclature	Part Number	COG/NIIN/SMIC	QTY REQ'D	QTY O/H	QTY Short	U/I	Unit Cost	CAGE Code	SM&R Code	Technical Reference
1.	AEGIS Display System (ADS) Emulator (Briggs Box)	N/A		1	1	0	EA	$72,000.00	53711		None
2.	Gun Computer System Training Facility (GCSTF) Computer Monitor	N/A	N/A	1	1	0	EA	$2,000.00	53711		None
3.	Gun Computer System Training Facility (GCSTF) Equipment Rack	N/A	N/A	1	1	0	EA	$2,000.00	53711		None
4.	Gun Computer System Training Facility (GCSTF) keyboard	N/A	N/A	1	1	0	EA	$150.00	53711		N/A
5.	Gun Computer System Training Facility AN/UYK-44 (V) EP/OSM	7221614-01		1	1	0	EA	$335,000.00	81349		SE610-PV-MMO-010, SE610-PV-SUP-030

6.	Gun Mount Interface Tester (GMIT) Desktop Computer	N/A	N/A	1	1	0	EA	$10,000.00	53711		N/A
7.	Vacuum Cleaner, General Purpose	N/A	N/A	1	1	0	EA	$100.00	53711		None

Test Equipment

No.	Type/Nomenclature	Part Number	COG/NIIN/SMIC	QTY REQ'D	QTY O/H	QTY Short	U/I	Unit Cost	CAGE Code	SM&R Code	Technical Reference
1.	Multimeter, Electronic, Digital, Fluke Corporation			1	0	1	EA	$240.00	9S972		N/A

Trainer Materials

No.	Type/Nomenclature	Part Number	COG/NIIN/SMIC	QTY REQ'D	QTY O/H	QTY Short	U/I	Unit Cost	CAGE Code	SM&R Code	Technical Reference
1.	Lesson Plan, Instructor, Gun Computer System (GCS) MK 160 MOD 8/Optical Sight System (OSS) MK 46 MOD 1 DIfferences Course			2	0	2	EA	$22.00	N/A		N/A
2.	Trainee Guide, Student, Gun Computer System (GCS) MK 160 MOD 8/Optical Sight System (OSS) MK 46 MOD 1 Differences Course	N/A		12	0	12	EA	$3.00	N/A		N/A

F. COMPENSATION

Manpower	Number/Type Billets	Source of Compensation	Shortfall
Center for Surface Combat Systems (CSCS) Combat Systems Learning Detachment, Dam Neck	1/FC1139/9502	A-113-0131	1

Funding	Dollar Amount	Source of Compensation	Shortfall
Center for Surface Combat Systems (CSCS) Combat Systems Learning Detachment, Dam Neck	$0.00	PEO IWS3C	$0.00

G. MILESTONES

	Milestone	Date Start	Date Complete
1.	Training Project Plan	10 Apr 2006	21 Apr 2006
2.	Personnel Performance Profiles	24 Apr 2006	28 Apr 2006
3.	Training Path System	01 May 2006	12 May 2006
4.	Training Course Control Document	15 May 2006	26 May 2006
5.	Lesson Plan	29 May 2006	09 Jun 2006
6.	Trainee Guide	12 Jun 2006	16 Jun 2006
7.	Tests & Test Administrator's Guide	19 Jun 2006	23 Jun 2006
8.	Pre-Faulted Module Integration	03 Jul 2006	21 Jul 2006
9.	Pilot Course	06 Nov 2006	22 Nov 2006
10.	Pilot Course Monitoring Report	01 Dec 2006	15 Dec 2006
11.	Letter of Promulgation	23 Feb 2007	23 Feb 2007

TAB A-2

PERSONNEL PERFORMANCE PROFILES

EQUIPMENT PPP TABLE

EXAMPLES

PERSONNEL PERFORMANCE PROFILE

TABLE S1277

Gun Mount Control Panel (GMCP) MK 437

(EQUIPMENT LEVEL)

5/5/2009

EQUIPMENT MODIFICATION RECORD

SHIPALT 54321

NEW DESIGN - DRAWING NUMBER

DWG 67890

Table S1277. Gun Mount Control Panel (GMCP) MK 437

ITEM NO.	KNOWLEDGE/SKILL
1.	SUBSYSTEM KNOWLEDGE
1-1.	GENERAL DESCRIPTION
1-1-1.	State the purpose of the Gun Mount Control Panel (GMCP) MK 437.
1-1-2.	State the purpose of the major components of the Gun Mount Control Panel (GMCP) MK 437. a. Display Panel b. Power Supply c. Control/Display Terminal (A1) d. Isolation Panel (A2) e. Isolation Transformer (A3) f. Pedestal Assembly (A4)
1-1-3.	Define the abbreviations, terms, and symbols used with the Gun Mount Control Panel (GMCP) MK 437.
1-1-4.	State the operational characteristics and capabilities of the Gun Mount Control Panel (GMCP) MK 437.
1-1-5.	Describe the modification differences of the Gun Mount Control Panel (GMCP) MK 437.
1-1-6.	State the security requirements of the Gun Mount Control Panel (GMCP) MK 437.
1-2.	PHYSICAL DESCRIPTION
1-2-1.	Describe the major components of the Gun Mount Control Panel (GMCP) MK 437. Include name, nomenclature, physical appearance, reference designators, and location. a. Display Panel b. Power Supply c. Control/Display Terminal (A1) d. Isolation Panel (A2) e. Isolation Transformer (A3) f. Pedestal Assembly (A4)
1-2-2.	Describe the controls, displays, and indicators of the Gun Mount Control Panel (GMCP) MK 437. Include location and positions.
1-3.	FUNCTIONAL DESCRIPTION

Table S1277. Gun Mount Control Panel (GMCP) MK 437 (Continued)

ITEM NO.	KNOWLEDGE/SKILL
1-3-1.	Describe the functional operation of the Gun Mount Control Panel (GMCP) MK 437. Include types of signals, signal flow, signal/data format, sequential operation, indications, and inputs and outputs.
1-3-2.	Describe the function of the controls, displays, and indicators of the Gun Mount Control Panel (GMCP) MK 437.
1-4.	INTERFACE DESCRIPTION
1-4-1.	Describe the physical interface between the Gun Mount Control Panel (GMCP) MK 437 and related external equipment. Include name, physical appearance, reference designators, and locations of cable routings.
1-4-2.	Describe the functional interface between the Gun Mount Control Panel (GMCP) MK 437 and related external equipment. a. Electrical b. Electronic
1-5.	OPERATIONAL DESCRIPTION
1-5-1.	Describe the authority and regulations pertaining to the operation of the Gun Mount Control Panel (GMCP) MK 437.
1-5-2.	Describe the tasks/procedures to be performed when operating the Gun Mount Control Panel (GMCP) MK 437. a. Pre-operational tasks/procedures b. Operational tasks/procedures c. Post-operational tasks/procedures
1-5-3.	Describe the recognition and interpretation of the indications that should or may occur during the operation of the Gun Mount Control Panel (GMCP) MK 437. Include the displays and indicators.
1-5-4.	Describe the Gun Mount Control Panel (GMCP) MK 437 casualty mode/s of operation.
1-5-5.	Describe the personnel and equipment safety precautions that are to be observed during operation of the Gun Mount Control Panel (GMCP) MK 437.
1-6.	MAINTENANCE DESCRIPTION

Table S1277. Gun Mount Control Panel (GMCP) MK 437 (Continued)

ITEM NO.	KNOWLEDGE/SKILL
1-6-1.	Define the maintenance philosophy for the Gun Mount Control Panel (GMCP) MK 437. Include maintenance policy and management plan. a. Preventive maintenance b. Corrective maintenance
1-6-2.	Describe the preventive maintenance procedures contained in prescribed maintenance documentation for the Gun Mount Control Panel (GMCP) MK 437.
1-6-3.	Describe the operational tests contained in prescribed maintenance documentation for the Gun Mount Control Panel (GMCP) MK 437.
1-6-4.	Describe the recognition and interpretation of malfunction indications of the Gun Mount Control Panel (GMCP) MK 437.
1-6-5.	Describe the systematic fault isolation procedures contained in prescribed maintenance documentation for the Gun Mount Control Panel (GMCP) MK 437.
1-6-6.	Describe the disassembly, repair, and reassembly procedures contained in prescribed maintenance documentation for the Gun Mount Control Panel (GMCP) MK 437.
1-6-7.	Describe the post-repair procedures contained in prescribed maintenance documentation for the Gun Mount Control Panel (GMCP) MK 437.
1-6-8.	Describe the personnel and equipment safety precautions that are to be observed during maintenance of the Gun Mount Control Panel (GMCP) MK 437.
1-7.	DOCUMENTATION DESCRIPTION
1-7-1.	Describe the organization, content, and use of the technical documentation provided with the Gun Mount Control Panel (GMCP) MK 437. a. SW224-A4-MMO-010 b. SW224-A4-MMO-020 c. SW224-A4-MMO-A10 d. SW224-A9-MMO-010 e. SW224-A9-MMO-020 f. SW224-BX-MMO-010 g. SW224-BX-MMO-020

Table S1277. Gun Mount Control Panel (GMCP) MK 437 (Continued)

ITEM NO.	KNOWLEDGE/SKILL
2.	SUBSYSTEM SKILLS
2-1.	OPERATION
2-1-1.	Perform the tasks/procedures for operating the Gun Mount Control Panel (GMCP) MK 437. a. Pre-operational tasks/procedures b. Operational tasks/procedures c. Post-operational tasks/procedures
2-1-2.	Recognize and interpret the indications that occur during operation of the Gun Mount Control Panel (GMCP) MK 437.
2-1-3.	Perform the Gun Mount Control Panel (GMCP) MK 437 casualty mode/s of operation.
2-1-4.	Adhere to personnel and equipment safety precautions during operation of the Gun Mount Control Panel (GMCP) MK 437.
2-2.	MAINTENANCE
2-2-1.	Perform the preventive maintenance procedures for the Gun Mount Control Panel (GMCP) MK 437 as scheduled by the Planned Maintenance System (PMS).
2-2-2.	Perform the operational tests for the Gun Mount Control Panel (GMCP) MK 437.
2-2-3.	Recognize and interpret the malfunction indications of the Gun Mount Control Panel (GMCP) MK 437.
2-2-4.	Perform the systematic fault isolation procedures for the Gun Mount Control Panel (GMCP) MK 437.
2-2-5.	Perform the procedures to disassemble, repair and reassemble the Gun Mount Control Panel (GMCP) MK 437 to the authorized maintenance level.
2-2-6.	Perform the post-repair procedures for the Gun Mount Control Panel (GMCP) MK 437.
2-2-7.	Adhere to personnel and equipment safety precautions during maintenance of the Gun Mount Control Panel (GMCP) MK 437.

SUBSYSTEM PPP

TABLE EXAMPLE

PERSONNEL PERFORMANCE PROFILE

TABLE S1274

Gun Computer System (GCS) MK 160

(SUBSYSTEM LEVEL)

5/5/2009

SUBSYSTEM MODIFICATION RECORD

None

NEW DESIGN - DRAWING NUMBER

None

Table S1274. Gun Computer System (GCS) MK 160

ITEM NO.	KNOWLEDGE/SKILL
1.	SUBSYSTEM KNOWLEDGE
1-1.	GENERAL DESCRIPTION
1-1-1.	State the purpose of the Gun Computer System (GCS) MK 160.
1-1-2.	State the purpose of the major components of the Gun Computer System (GCS) MK 160. a. Gun Console Computer (GCC) b. Gun Mount Processor (GMP) c. Gun Console (GC) d. Signal Data Converter/Gun Mount Processor (SDC/GMP) MK 20 e. Gun Mount Control Panel (GMCP) MK 437 f. Velocimeter MK 5 g. Recorder-Reproducer h. Gun Computer System Cabinet (GCSC) MK 119
1-1-3.	Define the abbreviations, terms, and symbols used with the Gun Computer System (GCS) MK 160.
1-1-4.	State the operational characteristics and capabilities of the Gun Computer System (GCS) MK 160.
1-1-5.	Describe the modification differences of the Gun Computer System (GCS) MK 160.
1-1-6.	State the security requirements of the Gun Computer System (GCS) MK 160.
1-2.	PHYSICAL DESCRIPTION
1-2-1.	Describe the major components of the Gun Computer System (GCS) MK 160. Include name, nomenclature, physical appearance, reference designators, and location. a. Gun Console Computer (GCC) b. Gun Mount Processor (GMP) c. Gun Console (GC) d. Signal Data Converter/Gun Mount Processor (SDC/GMP) MK 20 e. Gun Mount Control Panel (GMCP) MK 437 f. Velocimeter MK 5 g. Recorder-Reproducer h. Gun Computer System Cabinet (GCSC) MK 119

Table S1274. Gun Computer System (GCS) MK 160 (Continued)

ITEM NO.	KNOWLEDGE/SKILL
1-2-2.	Describe the controls, displays, indicators, and alarms of the Gun Computer System (GCS) MK 160. Include location and positions.
1-3.	FUNCTIONAL DESCRIPTION
1-3-1.	Describe the functional operation of the Gun Computer System (GCS) MK 160. Include types of signals, signal flow, signal/data format, sequential operation, indications, and inputs and outputs.
1-3-2.	Describe the function of the controls, displays, indicators, and alarms of the Gun Computer System (GCS) MK 160.
1-4.	INTERFACE DESCRIPTION
1-4-1.	Describe the physical interface between the Gun Computer System (GCS) MK 160 and related external equipment. Include name, physical appearance, reference designators, and locations of cable routings, junction boxes, switchboard connections, and cable terminations.
1-4-2.	Describe the functional interface between the Gun Computer System (GCS) MK 160 and related external equipment. a. Electrical b. Electronic
1-5.	OPERATIONAL DESCRIPTION
1-5-1.	Describe the authority and regulations pertaining to the operation of the Gun Computer System (GCS) MK 160.
1-5-2.	Describe the tasks/procedures to be performed when operating the Gun Computer System (GCS) MK 160. a. Pre-operational tasks/procedures b. Operational tasks/procedures c. Post-operational tasks/procedures
1-5-3.	Describe the recognition and interpretation of the indications that should or may occur during the operation of the Gun Computer System (GCS) MK 160. Include the displays, indicators, and alarms.
1-5-4.	Describe the Gun Computer System (GCS) MK 160 casualty, degraded, and abnormal mode/s of operation.

Table S1274. Gun Computer System (GCS) MK 160 (Continued)

ITEM NO.	KNOWLEDGE/SKILL
1-5-5.	Describe the function, use, and format of the tapes and disks utilized by the Gun Computer System (GCS) MK 160.
1-5-6.	Describe the personnel and equipment safety precautions that are to be observed during operation of the Gun Computer System (GCS) MK 160.
1-6.	MAINTENANCE DESCRIPTION
1-6-1.	Define the maintenance philosophy for the Gun Computer System (GCS) MK 160. Include maintenance policy and management plan. a. Preventive maintenance b. Corrective maintenance
1-6-2.	Describe the preventive maintenance procedures contained in prescribed maintenance documentation for the Gun Computer System (GCS) MK 160.
1-6-3.	Describe the operational tests and diagnostic programs contained in prescribed maintenance documentation for the Gun Computer System (GCS) MK 160.
1-6-4.	Describe the recognition and interpretation of malfunction indications of the Gun Computer System (GCS) MK 160.
1-6-5.	Describe the systematic fault isolation procedures contained in prescribed maintenance documentation for the Gun Computer System (GCS) MK 160.
1-6-6.	Describe the disassembly, repair, and reassembly procedures contained in prescribed maintenance documentation for the Gun Computer System (GCS) MK 160.
1-6-7.	Describe the post-repair procedures contained in prescribed maintenance documentation for the Gun Computer System (GCS) MK 160.
1-6-8.	Describe alignment, adjustment, and calibration procedures for the Gun Computer System (GCS) MK 160.
1-6-9.	Describe the personnel and equipment safety precautions that are to be observed during maintenance of the Gun Computer System (GCS) MK 160.
1-7.	DOCUMENTATION DESCRIPTION
1-7-1.	Describe the organization, content, and use of the technical documentation provided with the Gun Computer System (GCS) MK 160. a. SW224-A4-MMO-010

Table S1274. Gun Computer System (GCS) MK 160 (Continued)

ITEM NO.	KNOWLEDGE/SKILL
	b. SW224-A4-MMO-020 c. SW224-A4-MMO-A10 d. SW224-A9-MMO-010 e. SW224-A9-MMO-020 f. SW224-BX-MMO-010 g. SW224-BX-MMO-020

Table S1274. Gun Computer System (GCS) MK 160 (Continued)

ITEM NO.	KNOWLEDGE/SKILL
2.	SUBSYSTEM SKILLS
2-1.	OPERATION
2-1-1.	Perform the tasks/procedures for operating the Gun Computer System (GCS) MK 160. a. Pre-operational tasks/procedures b. Operational tasks/procedures c. Post-operational tasks/procedures
2-1-2.	Recognize and interpret the indications that occur during operation of the Gun Computer System (GCS) MK 160.
2-1-3.	Perform the Gun Computer System (GCS) MK 160 casualty, degraded, and abnormal mode/s of operation.
2-1-4.	Recognize and interpret the function, use, and format of the tapes and disks utilized by the Gun Computer System (GCS) MK 160.
2-1-5.	Adhere to personnel and equipment safety precautions during operation of the Gun Computer System (GCS) MK 160.
2-2.	MAINTENANCE
2-2-1.	Perform the preventive maintenance procedures for the Gun Computer System (GCS) MK 160 as scheduled by the Planned Maintenance System (PMS).
2-2-2.	Perform the operational tests and diagnostic programs for the Gun Computer System (GCS) MK 160.
2-2-3.	Recognize and interpret the malfunction indications of the Gun Computer System (GCS) MK 160.
2-2-4.	Perform the systematic fault isolation procedures for the Gun Computer System (GCS) MK 160.
2-2-5.	Perform the procedures to disassemble, repair and reassemble the Gun Computer System (GCS) MK 160 to the authorized maintenance level.
2-2-6.	Perform the post-repair procedures for the Gun Computer System (GCS) MK 160.

Table S1274. Gun Computer System (GCS) MK 160 (Continued)

ITEM NO.	KNOWLEDGE/SKILL
2-2-7.	Perform alignment, adjustment, and calibration procedures for the Gun Computer System (GCS) MK 160.
2-2-8.	Adhere to personnel and equipment safety precautions during maintenance of the Gun Computer System (GCS) MK 160.

SYSTEM PPP

TABLE EXAMPLE

PERSONNEL PERFORMANCE PROFILE

TABLE S1273

Gun Weapon System (GWS) MK 34

(SYSTEM LEVEL)

5/5/2009

SYSTEM MODIFICATION RECORD

SHIPALT 12345

NEW DESIGN - DRAWING NUMBER

DWG 98765

Table S1273. Gun Weapon System (GWS) MK 34

ITEM NO.	KNOWLEDGE/SKILL
1.	SYSTEM KNOWLEDGE
1-1.	GENERAL DESCRIPTION
1-1-1.	State the purpose of the Gun Weapon System (GWS) MK 34.
1-1-2.	State the purpose of the major components of the Gun Weapon System (GWS) MK 34. a. Gun Computer System (GCS) MK 160 b. Optical Sight System (OSS) MK 46 c. Gun System MK 45
1-1-3.	Define the abbreviations, terms, and symbols used with the Gun Weapon System (GWS) MK 34.
1-1-4.	State the operational characteristics and capabilities of the Gun Weapon System (GWS) MK 34.
1-1-5.	Describe the modification differences of the Gun Weapon System (GWS) MK 34.
1-1-6.	State the security requirements of the Gun Weapon System (GWS) MK 34.
1-2.	PHYSICAL DESCRIPTION
1-2-1.	Describe the major components of the Gun Weapon System (GWS) MK 34. Include name, nomenclature, physical appearance, reference designators, and location. a. Gun Computer System (GCS) MK 160 b. Optical Sight System (OSS) MK 46 c. Gun System MK 45
1-2-2.	Describe the controls, displays, indicators, and alarms of the Gun Weapon System (GWS) MK 34. Include location and positions.
1-3.	FUNCTIONAL DESCRIPTION
1-3-1.	Describe the functional operation of the Gun Weapon System (GWS) MK 34. Include types of signals, signal flow, signal/data format, sequential operation, indications, and inputs and outputs.
1-3-2.	Describe the function of the controls, displays, indicators, and alarms of the Gun Weapon System (GWS) MK 34. Include positions and colors.

Table S1273. Gun Weapon System (GWS) MK 34 (Continued)

ITEM NO.	KNOWLEDGE/SKILL
1-4.	INTERFACE DESCRIPTION
1-4-1.	Describe the physical interface between the Gun Weapon System (GWS) MK 34 and related external equipment. Include name, physical appearance, reference designators, and locations of cable routings, junction boxes, switchboard connections, and cable terminations.
1-4-2.	Describe the functional interface between the Gun Weapon System (GWS) MK 34 and related external equipment. a. Electrical b. Electronic
1-5.	OPERATIONAL DESCRIPTION
1-5-1.	Describe the authority and regulations pertaining to the operation of the Gun Weapon System (GWS) MK 34.
1-5-2.	Describe the tasks/procedures to be performed when operating the Gun Weapon System (GWS) MK 34. a. Pre-operational tasks/procedures b. Operational tasks/procedures c. Post-operational tasks/procedures
1-5-3.	Describe the recognition and interpretation of the indications that should or may occur during the operation of the Gun Weapon System (GWS) MK 34. Include the displays, indicators, alarms, and readouts.
1-5-4.	Describe the Gun Weapon System (GWS) MK 34 casualty, degraded, and abnormal mode/s of operation.
1-5-5.	Describe the function, use, and format of the tapes and disks utilized by the Gun Weapon System (GWS) MK 34.
1-5-6.	Describe the personnel and equipment safety precautions that are to be observed during operation of the Gun Weapon System (GWS) MK 34.
1-6.	MAINTENANCE DESCRIPTION
1-6-1.	Define the maintenance philosophy for the Gun Weapon System (GWS) MK 34. Include maintenance policy and management plan. a. Preventive maintenance b. Corrective maintenance

Table S1273. Gun Weapon System (GWS) MK 34 (Continued)

ITEM NO.	KNOWLEDGE/SKILL
1-6-2.	Describe the preventive maintenance procedures contained in prescribed maintenance documentation for the Gun Weapon System (GWS) MK 34.
1-6-3.	Describe the operational tests and diagnostic programs contained in prescribed maintenance documentation for the Gun Weapon System (GWS) MK 34.
1-6-4.	Describe the recognition and interpretation of malfunction indications of the Gun Weapon System (GWS) MK 34.
1-6-5.	Describe the systematic fault isolation procedures contained in prescribed maintenance documentation for the Gun Weapon System (GWS) MK 34.
1-6-6.	Describe the disassembly, repair, and reassembly procedures contained in prescribed maintenance documentation for the Gun Weapon System (GWS) MK 34.
1-6-7.	Describe the post-repair procedures contained in prescribed maintenance documentation for the Gun Weapon System (GWS) MK 34.
1-6-8.	Describe alignment, adjustment, and calibration procedures for the Gun Weapon System (GWS) MK 34.
1-6-9.	Describe the personnel and equipment safety precautions that are to be observed during maintenance of the Gun Weapon System (GWS) MK 34.
1-7.	DOCUMENTATION DESCRIPTION
1-7-1.	Describe the organization, content, and use of the technical documentation provided with the Gun Weapon System (GWS) MK 34. a. SW221-AD-MMO-010 b. SW221-AD-MMO-A10 c. SW221-A2-MMO-010 d. SW221-A3-MMO-010

Table S1273. Gun Weapon System (GWS) MK 34 (Continued)

ITEM NO.	KNOWLEDGE/SKILL
2.	SYSTEM SKILLS
2-1.	OPERATION
2-1-1.	Perform the tasks/procedures for operating the Gun Weapon System (GWS) MK 34. a. Pre-operational tasks/procedures b. Operational tasks/procedures c. Post-operational tasks/procedures
2-1-2.	Recognize and interpret the indications that occur during operation of the Gun Weapon System (GWS) MK 34.
2-1-3.	Perform the Gun Weapon System (GWS) MK 34 casualty, degraded, and abnormal mode/s of operation.
2-1-4.	Recognize and interpret the function, use, and format of the tapes and disks utilized by the Gun Weapon System (GWS) MK 34.
2-1-5.	Adhere to personnel and equipment safety precautions during operation of the Gun Weapon System (GWS) MK 34.
2-2.	MAINTENANCE
2-2-1.	Perform the preventive maintenance procedures for the Gun Weapon System (GWS) MK 34 as scheduled by the Planned Maintenance System (PMS).
2-2-2.	Perform the operational tests and diagnostic programs for the Gun Weapon System (GWS) MK 34.
2-2-3.	Recognize and interpret the malfunction indications of the Gun Weapon System (GWS) MK 34.
2-2-4.	Perform the systematic fault isolation procedures for the Gun Weapon System (GWS) MK 34.
2-2-5.	Perform the procedures to disassemble, repair and reassemble the Gun Weapon System (GWS) MK 34 to the authorized maintenance level.
2-2-6.	Perform the post-repair procedures for the Gun Weapon System (GWS) MK 34.
2-2-7.	Perform alignment, adjustment, and calibration procedures for the Gun Weapon System (GWS) MK 34.

Table S1273. Gun Weapon System (GWS) MK 34 (Continued)

ITEM NO.	KNOWLEDGE/SKILL
2-2-8.	Adhere to personnel and equipment safety precautions during maintenance of the Gun Weapon System (GWS) MK 34.

TASK/FUNCTION PPP

TABLE EXAMPLE

PERSONNEL PERFORMANCE PROFILE

TABLE B0772

Authoring Instructional Materials (AIM I) Personnel Performance Profile (PPP) Based Training Materials Development and Maintenance

(TASK/FUNCTION KNOWLEDGE AND SKILL)

2/28/2007

SYSTEM/SUBSYSTEM/EQUIPMENT MODIFICATION RECORD

AIM I Software Version

DRAFT

Rev B B0772-1/B0772-2

Table B0772. Authoring Instructional Materials (AIM I) Personnel Performance Profile (PPP) Based Training Materials Development and Maintenance

ITEM NO.	KNOWLEDGE/SKILL
1.	KNOWLEDGE
1-1.	GENERAL
1-1-1.	State the purpose of Authoring Instructional Materials (AIM I) software.
1-1-2.	Describe authority and regulations for use of the AIM I system.
1-1-3.	Describe the philosophy for developing Sections, Lessons, Modules, and Course in accordance with ILE policies and guidance using the Learning Object Module.
1-1-4.	Describe the philosophy of PPP based training material in accordance with NAVEDTRA 131A and 135. a. Training Project Plans b. Personnel Performance Profile (PPP) Tables c. Training Path Systems d. Training Course Control Documents (TCCD) e. Lesson Plans f. Trainee Guides g. Stages of Development h. Training Material Change and Revision Criteria
1-1-5.	Define the terms, abbreviations, and acronyms associated with AIM I.
1-1-6.	Describe the organization, content, and use of AIM I Software User's Manual.
1-1-7.	Describe the text editing methods, capabilities, and keyboard hot keys for AIM I.
1-1-8.	Describe the printed products of AIM I and the procedures for printing to a printer, print preview, and save as PDF.
1-1-9.	Describe indications that should or may occur during operation of the AIM system.
1-1-10.	Describe methods to access the AIM I software.
1-1-11.	Describe the AIM I software conventions.
1-1-12.	Describe training materials status.
1-1-13.	Describe user privilege levels.

Table B0772. Authoring Instructional Materials (AIM I) Personnel Performance Profile (PPP) Based Training Materials Development and Maintenance (Continued)

ITEM NO.	KNOWLEDGE/SKILL
1-1-14.	Describe AIM I system and data security requirements.
1-1-15.	Describe personnel and equipment safety precautions during operation of the AIM I system.
1-1-16.	Describe the functional modules of AIM I. a. Administration and Utilities b. Training Project Plans c. Personnel Performance Profiles d. Training Path Systems e. Training Course Control Documents f. Lesson Plans g. Trainee Guides h. Sharable Content Object Reference Model (SCORM) i. Test Module
1-1-17.	Describe the personnel associated with AIM I software. a. AIM Administrator b. AIM User
1-1-18.	Describe the software links between the functional modules of AIM I.
1-1-19.	Describe the functions of the AIM System Support Office (SSO).
1-2.	TRAINING MATERIAL DEVELOPMENT
1-2-1.	Describe the procedures to create a Training Project Plan (TPP). a. TPP Cover Page b. Contents Menu Item (1) Compensation Manpower and Funding (2) Course Overview/Comments (3) Course Status (4) Development Method (5) Justification (6) Milestones (7) Safety Risks and Hazardous Materials (8) Summary of Differences (9) Training Sites (a) Course Data (b) Site Considerations

Table B0772. Authoring Instructional Materials (AIM I) Personnel Performance Profile (PPP) Based Training Materials Development and Maintenance (Continued)

ITEM NO.	KNOWLEDGE/SKILL
	(c) RRL including Facility, Funding, Manpower and Training Material Items.
1-2-2.	Describe procedures to create a Personnel Performance Profile (PPP) table. a. Equipment/Subsystem/System b. Task/Function c. Background
1-2-3.	Describe procedures to create a Training Path System (TPS). a. TPS Cover Page b. TPS Introduction c. TPS Task Sets d. Training Path Chart (TPC) Cover Page e. Training Level Assignments (TLAs) f. Course List
1-2-4.	Describe the procedures to create a Training Course Control Document (TCCD). a. Foreword b. Course Data c. Trainee Data d. Curriculum Outline of Instruction (COI) (1) Training Requirements (2) Parts (3) Sections (4) Topics (5) Topic Learning Objectives (TLOs) (6) Course Learning Objectives (CLOs) e. Annexes (1) Profile Item-to-Topic Objective Assignment Chart (OAC) (2) Resource Requirements List (RRL) (3) Course Master Schedule (CMS) (4) Fault Applicability List (FAL)
1-2-5.	Describe procedures to create a Lesson Plan (LP). a. LP Cover Page (1) How to Use the Lesson Plan (2) Safety/Hazard Awareness Notice (3) Security Awareness Notice (4) Fault Applicability List (FAL)

Table B0772. Authoring Instructional Materials (AIM I) Personnel Performance Profile (PPP) Based Training Materials Development and Maintenance (Continued)

ITEM NO.	KNOWLEDGE/SKILL
	(5) Allocation of Instructional Time (AOIT) b. Resource Requirements List (RRL) c. Topics - Trainee Preparation and Topic Time d. Discussion Point (DP) Outline e. Related Instructor Activities (RIAs) to include, but not limited to: (1) RRL item selection (2) Before text selection (3) Fault selection f. Answer Sheets
1-2-6.	Describe procedures to create a Trainee Guide (TG). a. TG Cover Page (1) How to Use the Guide (2) Safety/Hazard Awareness Notice (3) Security Awareness notice b. Instruction Sheets c. Graphics operations d. Editors (1) High Edit (2) Word (3) Styled Text Editor
1-2-7.	Describe the procedures to create test items, tests, and test administration materials for a course.
1-3.	TRAINING MATERIAL MAINTENANCE
1-3-1.	Describe procedures for performing maintenance on AIM I developed training materials. a. PPP Table (1) Changes (2) Revisions b. TPS (1) Changes (2) Revisions c. TCCD (1) Changes (2) Revisions d. LP (1) Changes

Table B0772. Authoring Instructional Materials (AIM I) Personnel Performance Profile (PPP) Based Training Materials Development and Maintenance (Continued)

ITEM NO.	KNOWLEDGE/SKILL
	(2) Revisions e. TG (1) Changes (2) Revisions f. Test Items (1) Unapprove (2) Approve
1-3-2.	Describe the purpose and use of AIM I flags. a. System generated flags (@) b. Maintenance action flags (X) c. Interactive Multimedia Instructions (IMI) flags.
1-4.	ADMINISTRATION/UTILITIES
1-4-1.	Describe AIM I User Administration.
1-4-2.	Describe AIM I Password Administration
1-4-3.	Describe AIM I Admin Administration.
1-4-4.	Describe the Training Site Administration.
1-4-5.	Describe the Agency Administration.
1-4-6.	Describe AIM I Import/Export functions.
1-4-7.	Describe AIM I Delete Proposed Training Material Utility.
1-4-8.	Describe AIM I PPP/TPS Relink Utility
1-4-9.	Describe AIM I Data Manager Utility.
1-4-10.	Describe Site RRL Administration.
1-4-11.	Describe Reporting Administration
1-4-12.	Describe RRL/Graphics Location Tool Administration
1-4-13.	Describe the AIM I Graphics utility and management functions to include, but not limited to, the following: a. Add/Modify/Replace a graphic b. Delete a graphic c. Title a graphic

Table B0772. Authoring Instructional Materials (AIM I) Personnel Performance Profile (PPP) Based Training Materials Development and Maintenance (Continued)

ITEM NO.	KNOWLEDGE/SKILL
1-4-14.	Describe the procedures to Archive/Unarchive training material in AIM I.
1-4-15.	Describe the procedures to delete proposed training material in AIM I.
1-4-16.	Describe the procedures to identify related materials for RRL items using the AIM I Management Functions.
1-4-17.	Describe the recognition and interpretation of malfunction indications which can occur during operation of the AIM I system.
1-4-18.	Describe AIM I data logging and reporting requirements.
1-5.	TRAINING MATERIAL MANAGEMENT
1-5-1.	Describe training material configuration management for review and approval of newly developed materials, revisions, and changes in accordance with current directives.
1-5-2.	Describe training material configuration management involving multiple AIM I sites.
1-5-3.	Describe responsibilities for clearing System amd Maintenance generated flags.
1-5-4.	Describe Site RRL and Graphics management.
1-5-5.	Describe AIM I user and privilege management responsibilities.

Table B0772. Authoring Instructional Materials (AIM I) Personnel Performance Profile (PPP) Based Training Materials Development and Maintenance (Continued)

ITEM NO.	KNOWLEDGE/SKILL
2.	SKILLS
2-1.	GENERAL
2-1-1.	Recognize and interpret indications that should or may occur during operation of the AIM I system.
2-1-2.	Use AIM I Software User's Manuals and other technical documentation in support of AIM operations.
2-1-3.	Perform text editing.
2-1-4.	Perform procedures for printing, print prievewing, and saving AIM I materials as PDF files.
2-1-5.	Perform AIM I software access.
2-1-6.	Grant user privileges.
2-1-7.	Adhere to personnel and equipment safety precautions during operation of the AIM I system.
2-2.	ILE TRAINING MATERIAL DEVELOPMENT
2-2-1.	Create a Section from existing AIM I data.
2-2-2.	Create a Lesson.
2-2-3.	Create a Module.
2-2-4.	Create a Course.
2-3.	FORMAL CLASSROOM TRAINING MATERIAL DEVELOPMENT
2-3-1.	Create a TPP.
2-3-2.	Create a PPP table.
2-3-3.	Create a TPS.
2-3-4.	Create a TCCD.
2-3-5.	Create an LP.
2-3-6.	Create a TG.

Table B0772. Authoring Instructional Materials (AIM I) Personnel Performance Profile (PPP) Based Training Materials Development and Maintenance (Continued)

ITEM NO.	KNOWLEDGE/SKILL
2-3-7.	Create a SCORM output file.
2-3-8.	Create test item, test, and Administation support documentation for a course.
2-4.	TRAINING MATERIAL MAINTENANCE
2-4-1.	Perform maintenance on AIM I developed training materials. a. PPP Table Change b. PPP Table Revision c. TPS Change d. TPS Revision e. TCCD Change f. TCCD Revision g. LP Change h. LP Revision i. TG Change j. TG Revision
2-4-2.	Perform training materials modifications as indicated by AIM I system generated flags.
2-4-3.	Recognize and interpret malfunction indications which can occur during operation of the AIM I system.
2-4-4.	Perform data logging and reporting.
2-5.	ADMINISTRATION/UTILITIES
2-5-1.	Perform AIM I User Administration.
2-5-2.	Perform AIM I Admin Administration.
2-5-3.	Perform Training Site Administration.
2-5-4.	Perform Agency Administration.
2-5-5.	Perform Import/Export operations.
2-5-6.	Perform AIM I Printer Administration.
2-5-7.	Perform AIM I Data Manager Utilities.
2-5-8.	Perform AIM I Site RRL Administration.

Table B0772. Authoring Instructional Materials (AIM I) Personnel Performance Profile (PPP) Based Training Materials Development and Maintenance (Continued)

ITEM NO.	KNOWLEDGE/SKILL
2-5-9.	Perform AIM I Graphics operations.
2-5-10.	Perfrom Archive/Unarchive operations.
2-5-11.	Perform the operations of deleting proposed training material in AIM I.
2-5-12.	Perform the operations to approve training materials in AIM I.
2-5-13.	Perform the operations of the AIM I Maintenance Fuctions utility to identify the elements of a LP/TG which are effected by changes made to existing RRL items.
2-5-14.	Perform PPP/TPS Relink operations.
2-5-15.	Generate pre-formatted and adhoc reports.
2-5-16.	Locate RRL/Graphics using the RRL/Graphics Location Tool.
2-6.	TRAINING MATERIAL MANAGEMENT
2-6-1.	Perform training material configuration management for review and approval of revisions and changes in accordance with current directives.
2-6-2.	Coordinate training materials configuration management involving multiple AIM I sites.
2-6-3.	Review training material for maintenance actions required as indicated by AIM I system and user Maintenance flags.
2-6-4.	Coordinate archive/unarchive training materials in the AIM I system.

BACKGROUND PPP

TABLE EXAMPLE

PERSONNEL PERFORMANCE PROFILE

TABLE A0004

Basic Electronics

(BACKGROUND KNOWLEDGE AND SKILL)

7/19/1993

NEW DESIGN - DRAWING NUMBER

None

Table A0004. Basic Electronics

ITEM NO.	KNOWLEDGE/SKILL
1.	KNOWLEDGE
1-1.	Define the terms, abbreviations, and symbols associated with basic electronics.
1-2.	Describe the theory and construction features of semiconductors. a. Diode b. Silicon-Controlled rectifier c. Transistor d. Field Effect transistors e. Unijunction transistor f. Integrated circuits (chips)
1-3.	Describe the operating characteristics of semiconductors.
1-4.	Describe the following types of transistor amplifiers and bias classifications: a. Types (1) Operational (2) Audio (3) Turned b. Bias classifications (1) A (2) B (3) AB (4) C
1-5.	Describe the operation of transistor amplifiers connected in one of the three basic configurations. Include relative advantages of each configuration. a. Common Emitter b. Common Base c. Common Collector
1-6.	Describe the theory and operation of basic types of oscillator circuits.
1-7.	Describe the operation and characteristics of particular oscillators. Include equivalent circuits and types of feedback circuits used in each of the following: a. Armstrong b. Hartley c. Colpitts d. Multivibrator

Table A0004. Basic Electronics (Continued)

ITEM NO.	KNOWLEDGE/SKILL
	(1) Monostable (2) Bistable (3) Astable e. Blocking f. Unijunction g. Crystal h. Resistance-capacitance
1-8.	(deleted)
1-9.	Describe the theory and operating characteristics of semiconductor gating circuits.
1-10.	Describe the theory and construction features of electron tubes. a. Vacuum b. Gas filled
1-11.	Describe the electron tube operating characteristics, including the function of additional elements in multi-element tubes. a. Diode b. Triode c. Multi-element tubes d. (deleted) e. Gas filled tubes f. Cathode-ray tubes
1-12.	Describe the functional characteristics of a cathode-ray tube.
1-13.	(deleted)
1-14.	Describe the theory and operation of series- and parallel-tuned circuits.
1-15.	Describe the typical applications of tuned circuits.
1-16.	Describe the types and causes of distortion observed in amplifiers. a. Frequency b. Phase c. Amplitude
1-17.	Describe the basic coupling methods utilized in amplifiers. a. Resistance-capacitance b. Impedance

Table A0004. Basic Electronics (Continued)

ITEM NO.	KNOWLEDGE/SKILL
	c. Transformer d. Direct
1-18.	Describe the operation of typical electron type amplifiers. Include the methods of biasing and the method of determining amplifier gain.
1-19.	Describe the operation of an audio power amplifier. Include equivalent circuits and methods of determining power output. a. Class A b. Push-pull
1-20.	Describe the physical construction and basic operation of magnetic amplifiers.
1-21.	Describe the circuit operation of a magnetic amplifier. a. Cores b. Feedback c. Biasing
1-22.	Describe decibels as related to power, current, and voltage ratios.
1-23.	(deleted)
1-24.	(deleted)
1-25.	(deleted)
1-26.	(deleted)
1-27.	State the circuits which comprise a basic power supply. a. Rectifiers (1) Half-wave (2) Full-wave (3) Bridge b. Filters (capacitive/inductive) c. Regulators (1) Zener diode (2) Electronic d. Voltage divider e. Voltage multiplier
1-28.	Describe the operation of a basic power supply. Include common types of failures and resulting effects.

Table A0004. Basic Electronics (Continued)

ITEM NO.	KNOWLEDGE/SKILL
1-29.	(deleted)
1-30.	Define types of modulation. a. Amplitude b. Frequency c. Phase d. Pulse
1-31.	Describe the operation of each type of modulator. Include the method of determining the degree of modulation. a. Amplitude b. Frequency c. Phase d. Pulse
1-32.	Describe the operation and characteristics of demodulators. a. AM demodulators (1) Diode detector (2) Regenerative detector (3) Heterodyne detector b. FM demodulators (1) Slope detector (2) Discriminator (3) Ratio detector
1-33.	Describe basic configuration of a Continuous Wave (CW) transmitter. a. Oscillator b. Buffer amplifier c. Power amplifier d. Keyer e. Antenna f. Power supply g. Frequency multiplier
1-34.	Describe the operation of a CW transmitter. Include the methods of keying and common types of failures and resulting effects.
1-35.	Describe the operation of amplitude modulated transmitters. Include common types of failures and resulting effects.
1-36.	Describe the characteristics of transmission lines.

Table A0004. Basic Electronics (Continued)

ITEM NO.	KNOWLEDGE/SKILL
	a. Characteristic impedance b. Standing wave length c. Electrical length
1-37.	State the types transmission lines used. a. Parallel two-wire line b. Twisted pair c. Shielded pair d. Solid coaxial e. Air coaxial f. Waveguides
1-38.	Define basic antenna principles. a. Electrical length b. Radiation impedance c. Wave polarization
1-39.	State the two basic types of radio antennas and the differences between them. a. Hertz b. Marconi
1-40.	Describe the types of radio waves and the atmospheric conditions that affect their propagation. a. Ground wave b. Sky wave
1-41.	(deleted)
1-42.	Describe the basic configuration and general operation of the super-heterodyne receiver. a. Antenna b. RF amplifier c. Mixer and local oscillator d. IF amplifier e. Detector f. AF amplifier g. Speaker
1-43.	(deleted)
1-44.	(deleted)

Table A0004. Basic Electronics (Continued)

ITEM NO.	KNOWLEDGE/SKILL
1-45.	(deleted)
1-46.	(deleted)
1-47.	Describe the purpose, application, operation, and characteristics of the following electronic special circuits: a. Limiting circuits b. Differentiating circuits c. Integrating circuits d. Clamping circuits e. Counting circuits f. Phase shift circuits g. Automatic gain control circuits h. Automatic frequency control circuits i. Bridge circuits j. Frequency compensation circuits k. Integrated circuits l. Trigger circuits m. Pulse circuits n. Temperature compensation circuits
1-48.	(deleted)
1-49.	State the purpose, general operation, and characteristics of the following test equipment. a. Oscilloscope b. Frequency standard c. Signal generator d. Spectrum analyzer e. Capacitance-inductance-resistance bridges f. Tube tester g. Analog multimeter h. VTVM i. Digital voltmeter j. Electronic/Frequency counter k. Wattmeter l. Frequency meter m. Phase angle voltmeter n. Megohmmeter o. Logic probe

Table A0004. Basic Electronics (Continued)

ITEM NO.	KNOWLEDGE/SKILL
	p. Current probe q. Digital multimeter r. Differential voltmeter s. True RMS voltmeter t. DC power supply u. RF voltmeter
1-50.	Describe the use and content of standard Navy technical manuals.
1-51.	Describe the types of diagrams utilized in describing electronic equipment. a. Block diagram b. Timing diagram c. Schematic diagram d. (deleted) e. Wiring diagram
1-52.	(deleted)
1-53.	Describe the safety precautions that should be observed when working with electronic equipment and components including ESD.
1-54.	Describe the basic configuration and general operation of the following sound devices: a. Microphone b. Speaker
1-55.	Describe the characteristics and applications of readout display devices.
1-56.	Describe the procedures and techniques for performing basic maintenance tasks including: a. Crimping b. Splicing c. Soldering d. Removing and installing components on a basic circuit board e. Wire-wrap
1-57.	Describe the six-step troubleshooting procedure.

Table A0004. Basic Electronics (Continued)

ITEM NO.	KNOWLEDGE/SKILL
2.	SKILLS
2-1.	Analyze the operation of the following circuits. Include the organization of components and their functions. a. Amplifiers b. Oscillators c. Power supplies d. Modulators e. Demodulators f. Limiting circuits g. Differentiating and integrating circuits h. Clamping circuits i. Phase shifters j. Counting circuits k. AGC circuits l. AFC circuits m. Bridge circuits n. Frequency compensation circuits o. Trigger circuits p. Pulse circuits q. Integrated circuits r. Temperature compensation circuits
2-2.	Analyze the operation of a basic transmitter. a. AM transmitter b. (deleted) c. CW transmitter
2-3.	Analyze the operation of a basic receiver. a. T.R.F. receiver b. Superheterodyne
2-4.	(deleted)
2-5.	Diagnose common electronic faults using applicable publications.
2-6.	(deleted)
2-7.	Use basic test equipment. a. Oscilloscope b. Frequency standard

Table A0004. Basic Electronics (Continued)

ITEM NO.	KNOWLEDGE/SKILL
	c. Signal generator d. Spectrum analyzer e. Capacitance-inductance-resistance bridges f. Tube tester g. Analog multimeter h. VTVM i. Digital voltmeter j. Electronic/Frequency counter k. Wattmeter l. Frequency meter m. Phase angle voltmeter n. Megohmmeter o. Logic probe p. Current probe q. Digital multimeter r. Differential voltmeter s. True RMS voltmeter t. DC power supply u. RF voltmeter
2-8.	Perform basic maintenance tasks including: a. Crimping b. Removing and installing components on a circuit board c. Soldering d. Splicing e. Wire-wrap
2-9.	Perform basic adjustment and alignment procedures on basic and special electronic circuits.
2-10.	Observe safety precautions when working with electronic equipment.
2-11.	Construct and operate transistor amplifiers connected in the following basic configurations: a. Common Emitter b. Common Base c. Common Collector
2-12.	Construct and operate typical oscillators.

Table A0004. Basic Electronics (Continued)

ITEM NO.	KNOWLEDGE/SKILL
2-13.	Construct and operate series- and parallel-tuned circuits to fulfill specific frequency and input/output requirements.
2-14.	Construct and operate typical amplifiers, identifying biasing methods and determining amplifier stage gains. a. Transistor b. Vacuum tubes
2-15.	Determine decibels as used with power, current, and voltage ratios.
2-16.	Assemble and operate a typical basic power supply, detecting common types of failures and circuit effects.
2-17.	Operate a basic CW transmitter utilizing common methods of keying, and recognize common types of failures and resulting circuit effects.
2-18.	Operate basic AM transmitters. Identify common types of failures and the resulting circuit effects.
2-19.	Solve problems typical to the use and construction of transmission lines including: a. Characteristic impedance b. Standing wave ratio c. Wave polarization
2-20.	Solve problems in basic antenna analysis with respect to: a. Electrical length b. Radiation impedance c. Wave polarization
2-21.	Troubleshoot circuits using the six-step troubleshooting procedure.

TAB A-3

TRAINING PATH SYSTEM

Gun Computer System (GCS) MK 160 MOD 8/Optical Sight System (OSS) MK 46 MOD 1 Differences Course

TRAINING PATH SYSTEM
REPORT

PREPARED FOR

Center for Surface Combat Systems (CSCS) Dahlgren
5395 First St. Dahlgren, VA 22448

PREPARED BY

PEO IWS3C
Crystal Center, 2450 Crystal Drive, Arlington, VA 22202-3843

Gun Computer System (GCS) MK 160 MOD 8/Optical Sight System (OSS) MK 46 MOD 1 Differences Course

LIST OF EFFECTIVE ELEMENTS

Element No.	Change In Effect
TPS Cover Page	Original
List of Effective Elements	Original
TPS Introduction	Original
TPC 331 Cover Page	Original
TAC	Original
Curricula Index	Original
PPP Table Index	Original
TAM	Original
TLA S1273	Original
TLA S1274	Original
TLA S1277	Original
TLA S2789	Original
TLA S3706	Original
TLA S4291	Original
TLA S4292	Original

Element No.	Change In Effect

TRAINING PATH SYSTEM
INTRODUCTION

Introduction.

The Introduction provides an explanation of the items that comprise the Training Path System (TPS) report. The introduction can be tailored to the specific training situation. The TPS includes Training Objective Statements (TOS), Training Path Chart (TPC), and Training Level Assignments (TLAs).

Training Objective Statements (TOS).

The TOS describe knowledge and skills to be obtained and define the depth of coverage required for each Personnel Performance Profile (PPP) line item selected. TOS are canned statements which can be modified to describe the various levels and types of job-related training. TOS within a task set are assigned an alphanumeric code. The numeric portion of the code indicates the level of coverage of the knowledge or skill. Higher numbers normally indicate increasing depths of knowledge or skill performance.

a. TOS are grouped into training objective "Task Sets". Each task set describes the training for a different category of personnel, according to their occupational specialty. Task sets are provided for personnel who either:

(1) Coordinate,

(2) Direct, or

(3) Perform.

b. Within each task set, TOS are provided to describe the different skills, their performance levels, and the types and levels of knowledge to support the skills, as performed by a personnel category. The number of TOS varies with each task set.

c. Individual TOS within a task set are assigned an alphanumeric code. The numeric portion of the code indicates level of coverage of the knowledge or skill. Higher numbers normally indicate increasing depths of knowledge or skill performance. The TOS codes are as follows:

COORDINATE TASK SET

T0 TOS Category - Includes:

S - Background Skill
B1 - Background Knowledge
B2 - Background Comprehension
J - Task/Function Skill
Q - Task/Function Knowledge

Equipment, Subsystem, and System (ESS) Category - Includes;

F1 - Knowledge
O1 - Skill
T1 - Knowledge

DIRECT TASK SET

T0 TOS Category - Includes:

S - Background Skill
B1 - Background Knowledge
B2 - Background Comprehension
J - Task/Function Skill
Q - Task/Function Knowledge

ESS Category - Includes;

F1 - ESS Familiarization Knowledge
O1 - Normal Operation Skill
O2 - Abnormal and Casualty Operation Skill
M1 - Maintenance Skill
T1 - Knowledge
T2 - Knowledge

PERFORM TASK SET

T0 TOS Category - Includes:

S - Background Skill
B1 - Background Knowledge
B2 - Background Comprehension
J - Task/Function Skill
Q - Task/Function Knowledge

ESS Category - Includes;

F1 - ESS Familiarization Knowledge
O1 - Normal Operation Skill
O2 - Abnormal and Casualty Operation Skill
P1 - Maintenance Skill
C1 - Maintenance Skill
C2 - Maintenance Skill
C3 - Maintenance Skill
T1 - Knowledge
T2 - Knowledge
T3 - Knowledge

Training Level Assignment.

The TLA is a tabular presentation by PPP table number which consists of a left-hand column containing PPP item numbers and right-hand columns headed by TOS code. The placement of TOS code applicability indicator in the TOS column opposite a PPP table item denotes the knowledge depth or skill level required of that item for specific personnel and defines the environment of the training required for the PPP item.

To support the training categories reflected on the Training Assignment Chart (TAC), each TPC is supported by TLAs which designate the TOS levels for each PPP table line item with applicability code characters R, A, B, 0, 1, 2, 3, 4, or 5. The characters are defined as follows:

R - Replacement/Conversion/ILM Training Courses

A - Advanced Training Course

B - Both Replacement and Advanced Training Course

0 - Training hardware does not exist at the appropriate facility and operational constraints precluded onboard training.

1 - Operational experience is the only means to accomplish the specified training level.

2 - Training hardware does not exist to accomplish training at the appropriate facility and onboard training is permitted.

3 - Training hardware exists to accomplish training at a facility; onboard training is permitted; and training is accomplished onboard.

4 - Training is received by the individual outside of the cognizant Training Program.

5 - Background training is received by the individual as a part of the Navy Training Program.

All PPP items are assigned within the TLA by PPP line item number and line subitem number, where required.

COORDINATE TASK SET

BACKGROUND SKILL/KNOWLEDGE TOS

S - Skill:

Completion of training provides the PREREQUISITE (Background), PHYSICAL or MENTAL Skills necessary to support follow-on training in COORDINATING operation or maintenance of a system, subsystem, or equipment, a task/function, or further background training

B1 & B2 - Knowledge:

Completion of training provides the knowledge required to support follow-on training in COORDINATING the operation or maintenance of a system, subsystem, or equipment, a task/function, or further background training

TASK/FUNCTION SKILL/KNOWLEDGE TOS

J - Skill:

Completion of training provides the PHYSICAL AND/OR MENTAL Skills required to COORDINATE the job or task/function

Q - Knowledge:

Completion of training provides the knowledge required to COORDINATE the job or task/function

ESS FAMILIARIZATION TOS

F1 - Knowledge:

Completion of training provides FAMILIARITY with the:

Purpose, operational concepts, location, capabilities, and limitations of a system/subsystem/equipment

Organization, content, and use of the technical documentation provided for use with the system/subsystem/equipment

ESS OPERATION/MAINTENANCE SKILL TOS

O1 - Skill:

Completion of training provides the ability to coordinate operation and maintenance.

ESS OPERATION/MAINTENANCE KNOWLEDGE TOS

T1 - Knowledge:

Completion of training provides the knowledge to coordinate operation and maintenance:

Organization, content, and use of the technical documentation provided for use with the system/subsystem/equipment

DIRECT TASK SET

BACKGROUND SKILL/KNOWLEDGE TOS

S - Skill:

Completion of training provides the PREREQUISITE (Background), PHYSICAL or MENTAL Skills necessary to support follow-on training in DIRECTING the operation or maintenance of a system, subsystem, or equipment, a task/function, or further background training

B1 & B2 - Knowledge:

Completion of training provides the knowledge required to support follow-on training in DIRECTING the operation or maintenance of a system, subsystem, or equipment, a task/function, or further background training

TASK/FUNCTION SKILL/KNOWLEDGE TOS

J - Skill:

Completion of training provides the PHYSICAL AND/OR MENTAL Skills required to DIRECT the job or task/function

Q - Knowledge:

Completion of training provides the knowledge required to DIRECT the job or task/function

ESS FAMILIARIZATION TOS

F1 - Knowledge:

Completion of training provides FAMILIARITY with the:

Purpose, operational concepts, location, capabilities and limitations of a system/subsystem/equipment

Organization, content, and use of the technical documentation provided for use with the system/subsystem/equipment

ESS OPERATION/MAINTENANCE SKILL TOS

O1 - Skill:

Completion of training provides the ability to direct normal operations

O2 - Skill:

Completion of training provides the ability to direct:

Normal operations requiring advanced analysis

Abnormal operations (defined as casualty/degraded/not full mission capable)

M1 - Skill:

Completion of training provides the ability to direct maintenance

ESS OPERATION/MAINTENANCE KNOWLEDGE TOS

T1 - Knowledge:

Completion of training provides the knowledge to direct normal operations:

Organization, content, and use of the technical documentation provided for use with the system/subsystem/equipment

T2 - Knowledge:

Completion of training provides the knowledge to direct:

Normal operations requiring advanced analysis

Abnormal operations (defined as casualty/degraded/not full mission capable)

Maintenance

PERFORM TASK SET

BACKGROUND SKILL/KNOWLEDGE TOS

S - Skill:

Completion of training provides the PREREQUISITE (Background), PHYSICAL or MENTAL Skills necessary to support follow-on training in PERFORMING the operation or maintenance of a system, subsystem, or equipment, a task/function, or further background training

B1 & B2 - Knowledge:

Completion of training provides the knowledge required to support follow-on training in PERFORMING the operation or maintenance of a system, subsystem, or equipment, a task/function, or further background training

TASK/FUNCTION SKILL/KNOWLEDGE TOS

J - Skill:

Completion of training provides the PHYSICAL AND/OR MENTAL Skills required to PERFORM the job or function

Q - Knowledge:

Completion of training provides the knowledge required to support the performance of the skills required to PERFORM the job or task/function

ESS FAMILIARIZATION TOS

F1 - Knowledge:

Completion of training provides FAMILIARITY with the:

Purpose, operational concepts, location, capabilities and limitations of a system/subsystem/equipment

Organization, content, and use of the technical documentation provided for use with the system/subsystem/equipment

ESS OPERATION/MAINTENANCE SKILL TOS

O1 - Skill:

Completion of training provides the skill to perform normal operations

O2 - Skill:

Completion of training provides the skill to perform:

Normal operations requiring advanced analysis

Abnormal operations (defined as casualty/degraded/not full mission capable)

P1 - Skill:

Completion of training provides the skill to perform preventive maintenance

ESS OPERATION/MAINTENANCE SKILL TOS

C1 - Skill:

Completion of training provides the skill to perform to the authorized maintenance level, systematic fault isolation procedures

C2 - Skill:

Completion of training provides the skill to perform to the authorized maintenance level:

Systematic fault isolation procedures that require advanced analysis
Authorized techniques to isolate faults that cannot be isolated using procedures contained in prescribed documentation

C3 - Skill:

Completion of training provides the skill and knowledge to perform, without supervision:

Diagnosis of equipment malfunctions, fault isolation, and all repairs

This level of skill cannot be trained in the formal school setting. This skill is acquired only through on-the-job experience, and reflects a continuous learning process that is supported by the skills and knowledge taught in the formal school environment

The Training Level Assignment Applicability Indicator "1" will always be used to show this skill is acquired via "operational experience," i. e. , shipboard performance

ESS OPERATION/MAINTENANCE KNOWLEDGE TOS

T1 - Knowledge:

Completion of training provides the knowledge to perform normal operations:

Organization, content, and use of the technical documentation provided for use with the system/subsystem/equipment

T2 - Knowledge:

Completion of training provides the knowledge to perform:

Normal operations requiring advanced analysis

Abnormal operations (defined as casualty/degraded/not full mission capable)

Preventive maintenance

Basic corrective maintenance

T3 - Knowledge:

Completion of training provides the knowledge to perform advanced corrective maintenance

Gun Computer System MK 160 MOD 8/Optical Sight System MK 46 MOD 1 Differences Course

TRAINING PATH CHART

331

NEC/NOBC: FC-1139

TABLE ASSIGNMENT CHART
for
Gun Computer System MK 160 MOD 8/Optical Sight System MK 46 MOD 1 Differences Course

(NEC/NOBC: FC-1139) TPC - 331

TYPE	CIN	PPP Table	TOS Levels
A	A-113-0125	S1273	T1, T2, O1, O2, P1, C1
		S1274	T1, T2, O1, O2, P1, C1
		S1277	T1, T2, O1, P1
		S2789	T1, T2, O1, O2, P1, C1
		S3706	T1, T2, O1, O2, P1, C1
		S4291	T1, T2, O1
		S4292	T1, T2, O1, P1, C1

CURRICULA INDEX
for
Gun Computer System MK 160 MOD 8/Optical Sight System MK 46 MOD 1 Differences Course

(NEC/NOBC: FC-1139) TPC - 331

Center for Surface Combat Systems (CSCS) Dahlgren Number	Title	TOS Levels
A-113-0125	Gun Computer System (GCS) MK 160 MOD 8/Optical Sight System (OSS) MK 46 MOD 1 Differences Course	T1, T2, O1, O2, P1, C1

PPP TABLE INDEX
for
Gun Computer System MK 160 MOD 8/Optical Sight System MK 46 MOD 1 Differences Course

(NEC/NOBC: FC-1139) TPC - 331

S1273	Gun Weapon System (GWS) MK 34
S1274	Gun Computer System (GCS) MK 160
S1277	Gun Mount Control Panel (GMCP) MK 437
S2789	Optical Sight System (OSS) MK 46
S3706	Recorder Reproducer (RCRP) Set MK 27
S4291	Gun Console (GC)
S4292	Gun Console Computer (GCC) and Gun Mount Processor (GMP) AN/UYK-44(V)

TABLE ASSIGNMENT MATRIX
for
Gun Computer System MK 160 MOD 8/Optical Sight System MK 46 MOD 1 Differences Course

(NEC/NOBC: FC-1139) TPC - 331

TOS Assignment														
	Level													
PPP Table	**B1**	**B2**	**Q**	**F1**	**T1**	**T2**	**T3**	**S**	**J**	**O1**	**O2**	**P1**	**C1**	**C2**
S1273					X	X				X	X	X	X	
S1274					X	X				X	X	X	X	
S1277					X	X				X	X	X	X	
S2789					X	X				X	X	X	X	
S3706					X	X				X	X	X	X	
S4291					X	X				X	X	X		
S4292					X	X				X	X	X	X	

TRAINING LEVEL ASSIGNMENTS
for
Gun Computer System MK 160 MOD 8/Optical Sight System MK 46 MOD 1 Differences Course

(NEC/NOBC: FC-1139) TPC - 331

Table S1273										
	Level									
ITEM	F1	T1	T2	T3	O1	O2	P1	C1	C2	C3
1-1-1		A								
1-1-2		A								
1-1-2-a		A								
1-1-2-b		A								
1-1-2-c		A								
1-1-3		A								
1-1-4		A								
1-1-5		A								
1-1-6		A								
1-2-1		A								
1-2-2		A								
1-3-1		A								
1-3-2		A								
1-4-1		A								
1-4-2		A								
1-4-2-a		A								
1-4-2-b		A								
1-5-1		A								
1-5-2		A								
1-5-2-a		A								
1-5-2-b		A								
1-5-2-c		A								
1-5-3		A								
1-5-4			A							
1-5-5		A								
1-5-6		A	A							
1-6-1			A							
1-6-1-a			A							

TRAINING LEVEL ASSIGNMENTS
for
Gun Computer System MK 160 MOD 8/Optical Sight System MK 46 MOD 1 Differences Course

(NEC/NOBC: FC-1139) TPC - 331

Table S1273 (Cont)										
	Level									
ITEM	F1	T1	T2	T3	O1	O2	P1	C1	C2	C3
1-6-1-b			A							
1-6-2			A							
1-6-3			A							
1-6-4			A							
1-6-5			A							
1-6-6			A							
1-6-7			A							
1-6-8			A							
1-6-9			A							
1-7-1		A								
1-7-1-a		A								
1-7-1-b		A								
1-7-1-c		A								
1-7-1-d		A								
2-1-1					A					
2-1-1-a					A					
2-1-1-b					A					
2-1-1-c					A					
2-1-2					A					
2-1-3						A				
2-1-4					A					
2-1-5					A	A				
2-2-1							A			
2-2-2								A		
2-2-3								A		
2-2-4								A		
2-2-5								A		
2-2-6								A		

TAB A-4

TRAINING COURSE CONTROL DOCUMENT

TRAINING COURSE CONTROL DOCUMENT

Place Holder for Letter Of Promulgation

TRAINING COURSE CONTROL DOCUMENT

Foreword

The foreword is not required, but serves as a place to explain to reviewers any unique aspects of the course, which may not be apparent from the basic data.

TRAINING COURSE CONTROL DOCUMENT

COURSE DATA

Course Title:

Gun Computer System (GCS) MK 160 MOD 8/Optical Sight System (OSS) MK 46 MOD 1 Differences Course

Course Identification Number (CIN):

A-113-0125

Course Data Processing Code (CDP) by Site:	CDP
1. Center for Surface Combat Systems (CSCS) Learning Detachment, Dam Neck	582L

Course Status:

New

Course Mission Statement:

To train E4-E8 Fire Controlmen the Operation and Maintenance on the Gun Computer System (GCS) MK 160 MOD 8 and Optical Sight System (OSS) MK 46 MOD1 differences at the Journeyman Level on DDG-81and newer hulls both import and underway with minimal supervision.

Occupational Classification/Prerequisites:

Occupational Classification - NEC FC-1139 will be awarded upon successful completion of the training.

Prerequisites:

1. Successful completion of the GCS MK 160 MOD 4&6/OSS MK 46 MOD 0 Operation and Maintenance Course (A-113-0131) (FC-1120)

2. Rating: Fire Controlman

3. Paygrade: E4 to E7

Course Overview:

The Gun Computer System (GCS) MK 160 MOD 8/Optical Sight System (OSS) MK 46 MOD 1 Differences Course (A-113-0125) is designed to provide the knowledge and practical skills necessary for FC-1139 personnel to operate and maintain these two systems on board DDG-51 class ships and at sites ashore. In support of this objective, the differences course will contain theory, operation, preventive and documented corrective maintenance instruction for the following systems:

TRAINING COURSE CONTROL DOCUMENT

COURSE DATA (Continued)

1. Gun Weapon System (GWS) MK 34 MOD 1
2. Gun Computer System (GCS) MK 160 MOD 8
3. Gun Console (GC) OJ-719(V)/UYQ-70(V)
4. Recorder-Reproducer (RCRP) MK 27 MOD 1
5. Gun Console Computer (GCC) AN/UYK-44(V) Enhanced Processor/Open System Module (EP/OSM) with Expansion Adapter Group (EAG) OF-174(V)
6. Gun Mount Processor (GMP) AN/UYK-44(V) (EP/OSM)
7. Gun Mount Control Panel (GMCP) MK 437 MOD 1
8. Optical Sight System (OSS) MK 46 MOD 1

All preventive maintenance will be taught in accordance with established PMS requirements and guidelines.

All corrective maintenance will be taught and performed in accordance with documented/published procedures.

Course Length Required:

1 19 Calendar Days

Training Sites:

1. Center for Surface Combat Systems (CSCS) Learning Detachment, Dam Neck, 1912 Regulus Ave. Virginia Beach, VA 23461-2098

Site Unique Training Considerations:

1.

Number of Class Convenings by Training Site:	Required
1. Center for Surface Combat Systems (CSCS) Learning Detachment, Dam Neck	4

Class Capacity by Training Site:	Required
1. Center for Surface Combat Systems (CSCS) Learning Detachment, Dam Neck	
a. Maximum	10
b. Minimum	1

TRAINING COURSE CONTROL DOCUMENT

COURSE DATA (Continued)

Planned Average Onboard by Training Site:	Required
1. Center for Surface Combat Systems (CSCS) Learning Detachment, Dam Neck	2.08

Instructor/Support Manning by Site:

BSC	BIN		
71810	0839623	MK 160	FC1

TRAINING COURSE CONTROL DOCUMENT

TRAINEE DATA

Personnel Physical Requirements:

None

Security Clearance:

None

Obligated Service:

0 Months

NOBC/NEC Earned:

FC-1139

COURSE LEARNING OBJECTIVES

Upon successful completion of this course, the trainees will have acquired the following knowledge and skills and be able to:

Knowledge:

1. Describe the theory and associated documentation necessary to support and understand the performance of casualty/degraded/abnormal operational tasks and operational tasks requiring advanced analysis, all routine preventive maintenance, and documented fault isolation and repair without going into detailed logic, circuit analysis, individual program flow diagrams, or detailed mechanical component breakdown of the
   a. Gun Weapon System (GWS) MK 34
   b. Gun Computer System (GCS) MK 160
   c. Gun Mount Control Panel (GMCP) MK 437
   d. Optical Sight System (OSS) MK 46
   e. Recorder Reproducer (RCRP) Set MK 27
   f. Gun Console (GC)
   g. Gun Console Computer (GCC) and Gun Mount Processor (GMP) AN/UYK-44(V)

Skills:

1. Perform normal operational procedures with supervision on the
   a. Gun Mount Control Panel (GMCP) MK 437
   b. Gun Console (GC)
   c. Gun Console Computer (GCC) and Gun Mount Processor (GMP) AN/UYK-44(V)

2. Perform all operational procedures with supervision on the
   a. Gun Weapon System (GWS) MK 34
   b. Gun Computer System (GCS) MK 160
   c. Optical Sight System (OSS) MK 46
   d. Recorder Reproducer (RCRP) Set MK 27

3. Perform preventive maintenance procedures with supervision on the
   a. Gun Weapon System (GWS) MK 34
   b. Gun Computer System (GCS) MK 160
   c. Gun Mount Control Panel (GMCP) MK 437
   d. Optical Sight System (OSS) MK 46
   e. Recorder Reproducer (RCRP) Set MK 27
   f. Gun Console Computer (GCC) and Gun Mount Processor (GMP) AN/UYK-44(V)

COURSE LEARNING OBJECTIVES - Continued.

Skills:

4. Perform documented fault isolation and repair procedures to the authorized maintenance level, with supervision, on the
   a. Gun Weapon System (GWS) MK 34
   b. Gun Computer System (GCS) MK 160
   c. Optical Sight System (OSS) MK 46
   d. Recorder Reproducer (RCRP) Set MK 27
   e. Gun Console Computer (GCC) and Gun Mount Processor (GMP) AN/UYK-44(V)

PART S1273/1

GUN WEAPON SYSTEM (GWS) MK 34

Section 1. INTRODUCTION TO THE GUN WEAPON SYSTEM (GWS) MK 34 (T1)
Section 2. BASIC OPERATION OF THE GUN WEAPON SYSTEM (GWS) MK 34 (O1)

Section 1: INTRODUCTION TO THE GUN WEAPON SYSTEM (GWS) MK 34

Topic No.	Topic Title	Page
1	General, Physical, and Documentation Description of the Gun Weapon System (GWS) MK 34	S1273/1-1-1-1
2	Functional and Interface Description of the Gun Weapon System (GWS) MK 34	S1273/1-1-2-1
3	Operational Description of the Gun Weapon System (GWS) MK 34	S1273/1-1-3-1

Topic 1: GENERAL, PHYSICAL, AND DOCUMENTATION DESCRIPTION OF THE GUN WEAPON SYSTEM (GWS) MK 34

Topic Learning Objectives

Upon successful completion of this topic, the trainee will be able to:

1. State the purpose of the Gun Weapon System (GWS) MK 34 to the detail required to support normal operation.

2. Describe the modification differences of the Gun Weapon System (GWS) MK 34 to the detail required to support normal operation.

3. Describe the organization, content, and use of the technical documentation provided for use with the Gun Weapon System (GWS) MK 34 to the detail required to support normal operation.

   a. SW221-A1-MMO-010

4. Define the abbreviations, terms, and symbols used with the Gun Weapon System (GWS) MK 34 to the detail required to support normal operation.

5. State the purpose of the major components of the Gun Weapon System (GWS) MK 34 to the detail required to support normal operation.

   a. Gun Computer System (GCS) MK 160
   b. Optical Sight System (OSS) MK 46
   c. Gun System MK 45

6. Describe the major components of the Gun Weapon System (GWS) MK 34 including name, nomenclature, physical appearance, reference designators, and location to the detail required to support normal operation.

   a. Gun Computer System (GCS) MK 160
   b. Optical Sight System (OSS) MK 46
   c. Gun System MK 45

7. State the operational characteristics and capabilities of the Gun Weapon System (GWS) MK 34 to the detail required to support normal operation.

8. Describe the controls, displays, indicators, and alarms of the Gun Weapon System (GWS) MK 34, including location and positions to the detail required to support normal operation.

9. State the security requirements of the Gun Weapon System (GWS) MK 34 to the detail required to support normal operation.

Topic 2: FUNCTIONAL AND INTERFACE DESCRIPTION OF THE GUN WEAPON SYSTEM (GWS) MK 34

Topic Learning Objectives

Upon successful completion of this topic, the trainee will be able to:

1. Describe the physical interface between the Gun Weapon System (GWS) MK 34 and related external equipment, including name, physical appearance, reference designators, and locations of cable routings, junction boxes, switchboard connections, and cable terminations to the detail required to support normal operation.

2. Describe the functional interface between the Gun Weapon System (GWS) MK 34 and related external equipment to the detail required to support normal operation.

   a. Electrical
   b. Electronic

3. Describe the functional operation of the Gun Weapon System (GWS) MK 34, including the types of signals, signal flow, signal/data format, sequential operation, indications, and inputs and outputs to the detail required to support normal operation.

4. Describe the function of the controls, displays, indicators, and alarms of the Gun Weapon System (GWS) MK 34, including positions and colors to the detail required to support normal operation.

Topic 3: OPERATIONAL DESCRIPTION OF THE GUN WEAPON SYSTEM (GWS) MK 34

Topic Learning Objectives

Upon successful completion of this topic, the trainee will be able to:

1. Describe the personnel and equipment safety precautions that are to be observed during operation of the Gun Weapon System (GWS) MK 34 to the detail required to support normal operation.

2. Describe the authority and regulations pertaining to the operation of the Gun Weapon System (GWS) MK 34 to the detail required to support normal operation.

3. Describe the tasks/procedures to be performed when operating the Gun Weapon System (GWS) MK 34 to the detail required to support normal operation.

   a. Pre-operational tasks/procedures
   b. Operational tasks/procedures
   c. Post-operational tasks/procedures

4. Describe the recognition and interpretation of the indications that should or may occur during the operation of the Gun Weapon System (GWS) MK 34, including the displays, indicators, alarms, and readouts to the detail required to support normal operation.

5. Describe the function, use, and format of the tapes and disks utilized by the Gun Weapon System (GWS) MK 34 to the detail required to support normal operation.

Section 2: BASIC OPERATION OF THE GUN WEAPON SYSTEM (GWS) MK 34

Topic No.	Topic Title	Page
1	Basic Operation of the Gun Weapon System (GWS) MK 34	S1273/1-2-1-1

Topic 1: BASIC OPERATION OF THE GUN WEAPON SYSTEM (GWS) MK 34

Topic Learning Objectives

Upon successful completion of this topic, the trainee will be able to:

1. Adhere to personnel and equipment safety precautions during operation of the Gun Weapon System (GWS) MK 34 in accordance with normal operational procedures.

2. Perform the tasks/procedures for operating the Gun Weapon System (GWS) MK 34 in accordance with normal operational procedures.

   a. Pre-operational tasks/procedures
   b. Operational tasks/procedures
   c. Post-operational tasks/procedures

3. Recognize and interpret the indications that occur during operation of the Gun Weapon System (GWS) MK 34 in accordance with normal operational procedures.

4. Recognize and interpret the function, use, and format of the tapes and disks utilized by the Gun Weapon System (GWS) MK 34 in accordance with normal operational procedures.

PART S1273/2

GUN WEAPON SYSTEM (GWS) MK 34

Section 1. THEORY OF THE GUN WEAPON SYSTEM (GWS) MK 34 (T2)
Section 2. OPERATION OF THE GUN WEAPON SYSTEM (GWS) MK 34 (O2)

Section 1: THEORY OF THE GUN WEAPON SYSTEM (GWS) MK 34

Topic No.	Topic Title	Page
1	Operational Description of the Gun Weapon System (GWS) MK 34	S1273/2-1-1-1
2	Operational Description of the Gun Weapon System (GWS) MK 34	S1273/2-1-2-1

Topic 1: OPERATIONAL DESCRIPTION OF THE GUN WEAPON SYSTEM (GWS) MK 34

Topic Learning Objectives

Upon successful completion of this topic, the trainee will be able to:

1. Describe the personnel and equipment safety precautions that are to be observed during maintenance of the Gun Weapon System (GWS) MK 34 to the detail required to support preventive and documented corrective maintenance.

2. Define the maintenance philosophy for the Gun Weapon System (GWS) MK 34, including the maintenance policy and management plan to the detail required to support preventive and documented corrective maintenance.

   a. Preventive maintenance
   b. Corrective maintenance

3. Describe the preventive maintenance procedures contained in prescribed maintenance documentation for the Gun Weapon System (GWS) MK 34 to the detail required to support preventive and documented corrective maintenance.

4. Describe the operational tests and diagnostic programs contained in prescribed maintenance documentation for the Gun Weapon System (GWS) MK 34 to the detail required to support preventive and documented corrective maintenance.

5. Describe the recognition and interpretation of malfunction indications of the Gun Weapon System (GWS) MK 34 to the detail required to support preventive and documented corrective maintenance.

6. Describe the systematic fault isolation procedures contained in prescribed maintenance documentation for the Gun Weapon System (GWS) MK 34 to the detail required to support preventive and documented corrective maintenance.

7. Describe the disassembly, repair, and reassembly procedures contained in prescribed maintenance documentation for the Gun Weapon System (GWS) MK 34 to the detail required to support preventive and documented corrective maintenance.

8. Describe the post-repair procedures contained in prescribed maintenance documentation for the Gun Weapon System (GWS) MK 34 to the detail required to support preventive and documented corrective maintenance.

9. Describe alignment, adjustment, and calibration procedures for the Gun Weapon System (GWS) MK 34 to the detail required to support preventive and documented corrective maintenance.

Topic 2: OPERATIONAL DESCRIPTION OF THE GUN WEAPON SYSTEM (GWS) MK 34

Topic Learning Objectives

Upon successful completion of this topic, the trainee will be able to:

1. Describe the personnel and equipment safety precautions that are to be observed during operation of the Gun Weapon System (GWS) MK 34 to the detail required to support casualty/degraded/abnormal/not-full-mission capable modes of operation.

2. Describe the Gun Weapon System (GWS) MK 34 casualty, degraded, and abnormal mode/s of operation to the detail required to support casualty/degraded/abnormal/not-full-mission capable modes of operation.

Section 2: OPERATION OF THE GUN WEAPON SYSTEM (GWS) MK 34

Topic No.	Topic Title	Page
1	Basic Operation of the Gun Weapon System (GWS) MK 34	S1273/2-2-1-1

2. OPERATION OF THE GUN WEAPON SYSTEM (GWS) MK 34 A-113-0125

Topic 1: BASIC OPERATION OF THE GUN WEAPON SYSTEM (GWS) MK 34

Topic Learning Objectives

Upon successful completion of this topic, the trainee will be able to:

1. Adhere to personnel and equipment safety precautions during operation of the Gun Weapon System (GWS) MK 34 in accordance with casualty/degraded/abnormal/not-full-mission operational procedures.

2. Perform the Gun Weapon System (GWS) MK 34 casualty, degraded, and abnormal mode/s of operation in accordance with casualty/degraded/abnormal/not-full-mission operational procedures.

PART S1273/3

GUN WEAPON SYSTEM (GWS) MK 34

Section 1. PREVENTIVE MAINTENANCE OF THE GUN WEAPON SYSTEM (GWS) MK 34 (P1)

Section 1: PREVENTIVE MAINTENANCE OF THE GUN WEAPON SYSTEM (GWS) MK 34

Topic No.	Topic Title	Page
1	Preventive Maintenance of the Gun Weapon System (GWS) MK 34	S1273/3-1-1-1

Topic 1: PREVENTIVE MAINTENANCE OF THE GUN WEAPON SYSTEM (GWS) MK 34

Topic Learning Objectives

Upon successful completion of this topic, the trainee will be able to:

1. Adhere to personnel and equipment safety precautions during maintenance of the Gun Weapon System (GWS) MK 34 in accordance with preventive maintenance procedures.

2. Perform the preventive maintenance procedures for the Gun Weapon System (GWS) MK 34 as scheduled by the Planned Maintenance System (PMS) in accordance with preventive maintenance procedures.

PART S1273/4

GUN WEAPON SYSTEM (GWS) MK 34

Section 1. PREVENTIVE AND BASIC CORRECTIVE MAINTENANCE OF THE GUN WEAPON SYSTEM (GWS) MK 34 (C1)

Section 1: PREVENTIVE AND BASIC CORRECTIVE MAINTENANCE OF THE GUN WEAPON SYSTEM (GWS) MK 34

Topic No.	Topic Title	Page
1	Basic Corrective Maintenance of Gun Weapon System (GWS) MK 34	S1273/4-1-1-1

1. PREVENTIVE AND BASIC CORRECTIVE MAINTENANCE OF THE GUN WEAPON SYSTEM (GWS) MK 34 A-113-0125

Topic 1: BASIC CORRECTIVE MAINTENANCE OF GUN WEAPON SYSTEM (GWS) MK 34

Topic Learning Objectives

Upon successful completion of this topic, the trainee will be able to:

1. Adhere to personnel and equipment safety precautions during maintenance of the Gun Weapon System (GWS) MK 34 in accordance with documented corrective maintenance procedures.

2. Perform the operational tests and diagnostic programs for the Gun Weapon System (GWS) MK 34 in accordance with documented corrective maintenance procedures.

3. Recognize and interpret the malfunction indications of the Gun Weapon System (GWS) MK 34 in accordance with documented corrective maintenance procedures.

4. Perform the systematic fault isolation procedures for the Gun Weapon System (GWS) MK 34 in accordance with documented corrective maintenance procedures.

5. Perform the procedures to disassemble, repair and reassemble the Gun Weapon System (GWS) MK 34 to the authorized maintenance level in accordance with documented corrective maintenance procedures.

6. Perform the post-repair procedures for the Gun Weapon System (GWS) MK 34 in accordance with documented corrective maintenance procedures.

7. Perform alignment, adjustment, and calibration procedures for the Gun Weapon System (GWS) MK 34 in accordance with documented corrective maintenance procedures.

PROFILE ITEM-TO-TOPIC OBJECTIVE ASSIGNMENT CHART

Table	Item	TOS	Vol	Part	Sect	Topic	TLO	Test Item No.
S1273	1-1-1	T1		S1273/1	1	1	1	
S1273	1-1-2	T1		S1273/1	1	1	5	
S1273	1-1-2-a	T1		S1273/1	1	1	5	
S1273	1-1-2-b	T1		S1273/1	1	1	5	
S1273	1-1-2-c	T1		S1273/1	1	1	5	
S1273	1-1-3	T1		S1273/1	1	1	4	
S1273	1-1-4	T1		S1273/1	1	1	7	
S1273	1-1-5	T1		S1273/1	1	1	2	
S1273	1-1-6	T1		S1273/1	1	1	9	
S1273	1-2-1	T1		S1273/1	1	1	6	
S1273	1-2-2	T1		S1273/1	1	1	8	
S1273	1-3-1	T1		S1273/1	1	2	3	
S1273	1-3-2	T1		S1273/1	1	2	4	
S1273	1-4-1	T1		S1273/1	1	2	1	
S1273	1-4-2	T1		S1273/1	1	2	2	
S1273	1-4-2-a	T1		S1273/1	1	2	2	
S1273	1-4-2-b	T1		S1273/1	1	2	2	
S1273	1-5-1	T1		S1273/1	1	3	2	
S1273	1-5-2	T1		S1273/1	1	3	3	
S1273	1-5-2-a	T1		S1273/1	1	3	3	
S1273	1-5-2-b	T1		S1273/1	1	3	3	
S1273	1-5-2-c	T1		S1273/1	1	3	3	
S1273	1-5-3	T1		S1273/1	1	3	4	
S1273	1-5-4	T2		S1273/2	1	2	2	
S1273	1-5-5	T1		S1273/1	1	3	5	
S1273	1-5-6	T1		S1273/1	1	3	1	
S1273	1-5-6	T2		S1273/2	1	2	1	
S1273	1-6-1	T2		S1273/2	1	1	2	
S1273	1-6-1-a	T2		S1273/2	1	1	2	
S1273	1-6-1-b	T2		S1273/2	1	1	2	

Table	Item	TOS	Vol	Part	Sect	Topic	TLO	Test Item No.
S1273	1-6-2	T2		S1273/2	1	1	3	
S1273	1-6-3	T2		S1273/2	1	1	4	
S1273	1-6-4	T2		S1273/2	1	1	5	
S1273	1-6-5	T2		S1273/2	1	1	6	
S1273	1-6-6	T2		S1273/2	1	1	7	
S1273	1-6-7	T2		S1273/2	1	1	8	
S1273	1-6-8	T2		S1273/2	1	1	9	
S1273	1-6-9	T2		S1273/2	1	1	1	
S1273	1-7-1	T1		S1273/1	1	1	3	
S1273	1-7-1-a	T1		S1273/1	1	1	3	
S1273	1-7-1-b	T1		S1273/1	1	1	3	
S1273	1-7-1-c	T1		S1273/1	1	1	3	
S1273	1-7-1-d	T1		S1273/1	1	1	3	
S1273	2-1-1	O1		S1273/1	2	1	2	
S1273	2-1-1-a	O1		S1273/1	2	1	2	
S1273	2-1-1-b	O1		S1273/1	2	1	2	
S1273	2-1-1-c	O1		S1273/1	2	1	2	
S1273	2-1-2	O1		S1273/1	2	1	3	
S1273	2-1-3	O2		S1273/2	2	1	2	
S1273	2-1-4	O1		S1273/1	2	1	4	
S1273	2-1-5	O1		S1273/1	2	1	1	
S1273	2-1-5	O2		S1273/2	2	1	1	
S1273	2-2-1	P1		S1273/3	1	1	2	
S1273	2-2-2	C1		S1273/4	1	1	2	
S1273	2-2-3	C1		S1273/4	1	1	3	
S1273	2-2-4	C1		S1273/4	1	1	4	
S1273	2-2-5	C1		S1273/4	1	1	5	
S1273	2-2-6	C1		S1273/4	1	1	6	
S1273	2-2-7	C1		S1273/4	1	1	7	
S1273	2-2-8	P1		S1273/3	1	1	1	

RESOURCE REQUIREMENTS LIST

COURSE: Gun Computer System (GCS) MK 160 MOD 8/Optical Sight System (OSS) MK 46 MOD 1 Differences Course

SITE NAME: Center for Surface Combat Systems (CSCS) Learning Detachment, Dam Neck

CLASS SIZE: 10

A. Texts

Doc. No.	Title	Per Tr.	Per Inst.	Per Cl.
A-113-0125	Gun Computer System (GCS) MK 160 MOD 8/Optical Sight System (OSS) MK 46 MOD 1 Differences Course Lesson Plan. Prepared by PEO IWS3C.		1	
A-113-0125	Gun Computer System (GCS) MK 160 MOD 8/Optical Sight System (OSS) MK 46 MOD 1 Differences Course Trainee Guide. Prepared by PEO IWS3C.	1	1	

B. References

Doc. No.	Title	Per Tr.	Per Inst.	Per Cl.
MIP 4801/006 OPNAVINST 4790 (Series)	Preventive Maintenance Requirements for Gun Weapon System (GWS) MK 34 MOD 0 & 1	1	1	1
MIP 4813/007 OPNAVINST 4790 (Series)	Preventive Maintenance for Optical Sight System (OSS) MK 46 MOD 0 & 1	1	1	1
MIP 4813/008 OPNAVINST 4790 (Series)	Preventive Maintenance for Gun Computer System (GCS) MK 160 (MOD)	1	1	1
OPNAVINST 5510.10 (Series)	Information and Personnel Security Program Regulation	1	1	1

RESOURCE REQUIREMENTS LIST - Continued.

Doc. No.	Title	Per Tr.	Per Inst.	Per Cl.
SE610-PV-MMO-010	Organizational Level Maintenance for Data Processing Set (DPS) AN/UYK-44(V)	1	1	1
SE610-PV-SUP-030	Technical Manual Supplement for Data Processing Set (DPS) AN/UYK-44(V)	1	1	1
SE685-CA-MMO-05A	Maintenance Manual for Command and Decision Console OJ-719(V)9/AN/UYQ-70(V)	1	1	1
SE686-CA-MMO-050	Maintenance Manual for Command and Decision Console OJ-719(V)/UYQ-70(V)	1	1	1
SE686-CL-MMO-030	Technical Manual for Command and Decision Console OJ-719(V)11/UYQ-70	1	1	1
SW210-A1-MMO-010	Technical Manual Optical Sight System MK 46 MOD 1	1	1	1
SW210-A1-MMO-020	Technical Manual Optical Sight System MK 46 MOD 1	1	1	1
SW221-A1-MMO-010	Maintenance Manual for Gun Weapon System MK 34 MOD 1	1	1	1
SW224-A8-MMO-010	Maintenance Manual for Gun Computer System MK 160 MOD 8	1	1	1
SW224-AA-MMO-A10	Technical Manual for Recorder Reproducer MK 27 MOD 1	1	1	1

C. Equipment

Item No.	Nomenclature	Part No.	Unit Cost	CAGE	Tech. Ref.	Per Tr.	Per Inst.	Per Cl.
1.	Above Deck Sensor Unit MK 85 MOD 1 (p/o OSS MK 46 MOD 1)	006040518			SW210-A1-MMO-010/020			1

RESOURCE REQUIREMENTS LIST - Continued.

Item No.	Nomenclature	Part No.	Unit Cost	CAGE	Tech. Ref.	Per Tr.	Per Inst.	Per Cl.
2.	Command and Decision Console OJ-719(V)/UYQ-70(V) (p/o GCS MK 160 MOD 8)	7244436	$275,000.00		SE686-CA-MMO-050			1
3.	Control and Display Console (CDC) MK 132 MOD 2 (p/o OSS MK 46 MOD 1)	006040525			SW210-A1-MMO-010/020			1
4.	Gun Computer System (GCS) MK 160 MOD 8	No Number			SW224-A8-MMO-010			1
5.	Gun Console Computer (GCC) AN/UYK-44(V) (EP/OSM) with Expansion Adapter Group (EAG) OF-174(V) (p/o GCS MK 160 MOD 8)	7221614-01	$495,000.00		SW224-A8-MMO-010, SE610-PV-MMO-010, SE610-PV-SUP-030			1
6.	Gun Mount Control Panel (GMCP) MK 437 MOD 1	7244531	$70,000.00		SW224-A8-MMO-010			1
7.	Gun Mount Processor (GMP) AN/UYK-44(V) (EP/OSM) (P/o GCS MK 160 MOD 8	7221614-01	$335,000.00		SW224-A8-MMO-010			1
8.	Optical Sight System (OSS) MK 46 MOD 1	0-006040005	$1,700,000.00		SW210-A1-MMO-010/020			1

RESOURCE REQUIREMENTS LIST - Continued.

Item No.	Nomenclature	Part No.	Unit Cost	CAGE	Tech. Ref.	Per Tr.	Per Inst.	Per Cl.
9.	Power Supply (PS) MK 177 MOD 1 (p/o OSS MK 46 MOD 1)	006040535			SW210-A1-MMO-010/020			1
10.	Recorder Reproducer (RCRP) MK 27 MOD 1 (p/o GCS MK 160 MOD 8)	7244867-1	$120,000.00		SW224-AA-MMO-010			1
11.	Safety Switch S1 (p/o OSS MK 46 MOD 1)	071449			SW210-A1-MMO-010/020			1
12.	Stabilization and Electronics Unit (SEU) MK 104 MOD 1 (p/o OSS M K46 MOD 1)	00604A666			SW210-A1-MMO-010/020			1

D. Films/Videotapes/Videodiscs

Designator	Title	Running Time	Per Cl.
None			

E. Graphics

1. Transparencies

Title	Per Cl.	Source	Figure No.
None			

2. Slides.

Title	Per Cl.	Source	Figure No.
None			

RESOURCE REQUIREMENTS LIST - Continued.

3. Wall Charts.

Wall Chart No.	Title	Per Cl.	Source	Figure No.
None				

F. Hand Tools

Item No.	Nomenclature	Part No.	Unit Cost	CAGE	Tech. Ref.	Per Tr.	Per Inst.	Per Cl.
1.	General Purpose Hand Tools	N/A	$150.00		N/A	1	1	1

G. Prefaulted Modules

Item No.	Nomenclature	Part No.	Unit Cost	CAGE	Tech. Ref.	Per Tr.	Per Inst.	Per Cl.
1.	S1277 #1 (GMCP) Failed Power Supply, Gun Mount Control Panel (GMCP) MK 437 MOD 1	20010006-015			SW224-A8-MMO-010	1	1	1
2.	S1277 #2 (GMCP) Failed Velocimeter Faile-Safe CCA	7625460	$2,000.00		SW224-A8-MMO-010	1	1	1
3.	S1277 #3 (GMCP) Failed Indicating Fuze Holder	FHL32W-11	$80.00		SW224-A8-MMO-010	1	1	1
4.	S2789 #1 (OSS) Failed OSS CPU 2A1A3A1A9	6937022	$3,000.00		SW210-A1-MMO-010	1	1	1
5.	S2789 #2 (OSS) Failed Relay Driver CCA 3A1	6939846	$9,000.00		SW210-A1-MMO-010	1	1	1

RESOURCE REQUIREMENTS LIST - Continued.

Item No.	Nomenclature	Part No.	Unit Cost	CAGE	Tech. Ref.	Per Tr.	Per Inst.	Per Cl.
6.	S2789 #3 (OSS) Failed Encoder CCA 2A1A3A1A15	6936847	$5,000.00		SW210-A1-MMO-010	1	1	1
7.	S2789 #4 (OSS) Disable F/O Transmitter 4A2, 3, 4, or 5 Fault Insertion Technique	N/A			SW210-A1-MMO-010	1	1	1
8.	S2789 #5 (OSS) Disable Safety Switch Connector S1J1 Fault Insertion Technique	N/A			SW210-A1-MMO-010	1	1	1
9.	S2789 #6 (OSS) Fuze Failure for PS MK 177 MOD 1 Test Panel Fault Insertion Technique	N/A			SW210-A1-MMO-010	1	1	1
10.	S2805 #1 (GCC) Failed Fiber Distributed Data Interface CCA	5211-DAS-ST-1M			SW224-A8-MMO-010	1	1	1
11.	S2805 #2 (GMP) Failed VME-IOC CCA Fault Insertion Technique	N/A	$0.00		SW224-A8-MMO-010	1	1	1
12.	S2805 #3 (GCC) Failed Clock Re-Driver CCA	7365072			SW224-A8-MMO-010	1	1	1

RESOURCE REQUIREMENTS LIST - Continued.

Item No.	Nomenclature	Part No.	Unit Cost	CAGE	Tech. Ref.	Per Tr.	Per Inst.	Per Cl.
13.	S2805 #4 (GMP) Failed SCRAMNet CCA	H-AS-D6VME 04M-02			SW224-A8-MMO-010	1	1	1
14.	S2805 #5 (GCC) Failed Motorola 2600 Single Board Computer (SBC) CCA	7244868-02			SW224-A8-MMO-010	1	1	1
15.	S2805 #6 (GMP) Failed Enhanced Processor (EP)/VME CCA	7372452-17			SW224-A8-MMO-010	1	1	1
16.	S3399 #1 (Gun Console) Disabled SCSI Cable Interface Fault Insertion Technique	N/A			SE686-CA-MMO-050, SE686-CL-MMO-030	1	1	1
17.	S3399 #2 (Gun Console) Disable CB1 Fault Insertion Technique	N/A			SE686-CA-MMO-050, SE686-CL-MMO-030	1	1	1
18.	S3706 #1 (RCRP) Failed Isolation Transformer to DCC Power Cable		$20.00		SW224-AA-MMO-010	1	1	1
19.	S3706 #2 (RCRP) Failed Data Storage Set (DSS) Power Supply	709SZ005-02	$2,300.00		SW224-AA-MMO-010	1	1	1

RESOURCE REQUIREMENTS LIST - Continued.

Item No.	Nomenclature	Part No.	Unit Cost	CAGE	Tech. Ref.	Per Tr.	Per Inst.	Per Cl.
20.	S3706 #3 (RCRP) Failed Ethernet Tee Connector	BN23	$4.00		SW224-AA-MMO-010	1	1	1

H. Software

No.	Title	Number	Version	Vendor	Type	Cost	Reference	Per Tr.	Per Inst.	Per Cl.
1.	Gun Computer System (GCS) MK 160 MOD 8 Operational Program	PGM 0819				$330.00	SW224-A8-MMO-010	1	1	1
2.	Gun Computer System MK 160 MOD 8 VxWorks Operating System	PGM 0807				$330.00	SW224-A8-MMO-010	1	1	1
3.	Gun Computer System Training Facility (GCSTF) Operational Program	PGM 0824				$330.00		1	1	1
4.	Gun Mount Interface Tester (GMIT) Operational Program	PGM 0823				$330.00		1	1	1
5.	Naval Surface Fire Support Embedded Trainer (NSFSET) Operational Program	PGM 0854				$330.00	SW224-A8-GYD-060	1	1	1
6.	Optical Sight System (OSS) MK 46 MOD 1 Operational Program	PGM 0834				$1,000.00	SW210-A1-MMO-010	1	1	1

RESOURCE REQUIREMENTS LIST - Continued.

No.	Title	Number	Version	Vendor	Type	Cost	Reference	Per Tr.	Per Inst.	Per Cl.
7.	Optical Sight System (OSS) MK 46 MOD 1 VxWorks Operating System	PGM 0807				$500.00	Resident on Motorola 2604 variants of the 2A1A3A1A9 Central Processor CCA. Being phased out.	1	1	1
8.	Optical Sight System (OSS) MK 46 MOD 1 VxWorks Operating System	PGM 0838				$500.00	Resident on Motorola 270X-Series 2A1A3A1A9 Central Processor CCAs. Phase in beginning with DDG 90.	1	1	1
9.	Optical Sight System MK 46 MOD 1 X-Windows Display Manager	PGM 0840				$500.00	SW210-A1-MMO-010	1	1	1
10.	Recorder Reproducer Set (RCRP) MK 27 MOD 1 Operational Program	PGM 0829				$330.00	SW224-AA-MMO-010	1	1	1

RESOURCE REQUIREMENTS LIST - Continued.

I. Support Equipment

Item No.	Nomenclature	Part No.	Unit Cost	CAGE	Tech. Ref.	Per Tr.	Per Inst.	Per Cl.
1.	AEGIS Display System (ADS) Emulator (Briggs Box)	N/A	$72,000.00		None	1	1	1
2.	Gun Computer System Training Facility (GCSTF) Computer Monitor	N/A	$2,000.00		None	1	1	1
3.	Gun Computer System Training Facility (GCSTF) Equipment Rack	N/A	$2,000.00		None	1	1	1
4.	Gun Computer System Training Facility (GCSTF) keyboard	N/A	$150.00		N/A	1	1	1
5.	Gun Computer System Training Facility AN/UYK-44 (V) EP/OSM	7221614-01	$335,000.00		SE610-PV-MMO-010, SE610-PV-SUP-030	1	1	1
6.	Gun Mount Interface Tester (GMIT) Desktop Computer	N/A	$10,000.00		N/A	1	1	1
7.	Vacuum Cleaner, General Purpose	N/A	$100.00		None	1	1	1

RESOURCE REQUIREMENTS LIST - Continued.

J. Test Equipment

Item No.	Nomenclature	Part No.	Unit Cost	CAGE	Tech. Ref.	Per Tr.	Per Inst.	Per Cl.
1.	Multimeter, Electronic, Digital, Fluke Corporation		$240.00		N/A	1	1	1

K. Trainer Materials

Item No.	Nomenclature	Part No.	Unit Cost	CAGE	Tech. Ref.	Per Tr.	Per Inst.	Per Cl.
1.	Lesson Plan, Instructor, Gun Computer System (GCS) MK 160 MOD 8/Optical Sight System (OSS) MK 46 MOD 1 DIfferences Course		$22.00		N/A	1	1	1
2.	Trainee Guide, Student, Gun Computer System (GCS) MK 160 MOD 8/Optical Sight System (OSS) MK 46 MOD 1 Differences Course	N/A	$3.00		N/A	1	1	1

L. Support Materials

Instruction Sheets. All instruction sheets (i.e., Assignment Sheets, Job Sheets, etc.) are A-113-0125 series.

Identification No.	Instruction Sheet Type	Title	Per Tr.	Per Inst.	Per Cl.

(All instruction sheets for this course are contained within Trainee Guide A-113-0125.)

COURSE MASTER SCHEDULE

A-113-0125

Length of period : 50 minutes

WEEK 1

DAY 1

Topic No.	Type	Period	Topic Title	Ratio	BottleNeck
S1273/1-1-1	Class	1	General, Physical, and Documentation Description of the Gun Weapon System (GWS) MK 34	10:1	
S1273/1-1-2	Class	2	Functional and Interface Description of the Gun Weapon System (GWS) MK 34	10:1	
S1273/1-1-2	Class	3	Functional and Interface Description of the Gun Weapon System (GWS) MK 34	10:1	
S1273/1-1-2	Class	4	Functional and Interface Description of the Gun Weapon System (GWS) MK 34	10:1	
S1273/1-1-2	Class	5	Functional and Interface Description of the Gun Weapon System (GWS) MK 34	10:1	
S1273/1-1-3	Class	6	Operational Description of the Gun Weapon System (GWS) MK 34	10:1	
S1273/1-1-3	Class	7	Operational Description of the Gun Weapon System (GWS) MK 34	10:1	
S1273/1-1-3	Class	8	Operational Description of the Gun Weapon System (GWS) MK 34	10:1	

DAY 2

Topic No.	Type	Period	Topic Title	Ratio	BottleNeck
S1273/1-2-1	Lab	9	Basic Operation of the Gun Weapon System (GWS) MK 34	10:1	(2/1)
S1273/1-2-1	Lab	10	Basic Operation of the Gun Weapon System (GWS) MK 34	10:1	(2/1)
S1273/1-2-1	Lab	11	Basic Operation of the Gun Weapon System (GWS) MK 34	10:1	(2/1)

COURSE MASTER SCHEDULE (Continued)

Topic No.	Type	Period	Topic Title	Ratio	BottleNeck
S1273/1-2-1	Lab	12	Basic Operation of the Gun Weapon System (GWS) MK 34	10:1	(2/1)
S1273/1-2-1	Lab	13	Basic Operation of the Gun Weapon System (GWS) MK 34	10:1	(2/1)
S1274/1-1-1	Class	14	General, Physical, and Documentation Description of Gun Computer System (GCS) MK 160	10:1	
S1274/1-1-1	Class	15	General, Physical, and Documentation Description of Gun Computer System (GCS) MK 160	10:1	
S1274/1-1-2	Class	16	Functional and Interface Description of Gun Computer System (GCS) MK 160	10:1	
DAY 3					
Topic No.	**Type**	**Period**	**Topic Title**	**Ratio**	**BottleNeck**
S1274/1-1-2	Class	17	Functional and Interface Description of Gun Computer System (GCS) MK 160	10:1	
S4291-1-1	Class	18	General, Physical, and Documentation Description of the Gun Console (GC)	10:1	
S4291-1-2	Class	19	Functional and Interface Description of the Gun Console (GC)	10:1	
S4291-1-3	Class	20	Operational Description of the Gun Console (GC)	10:1	
S4291-2-1	Class	21	Operational Description of the Gun Console (GC)	10:1	
S4291-3-1	Lab	22	Basic Operation and Casualty Operation of the Gun Console (GC)	10:1	(5/1)
S4291-3-1	Lab	23	Basic Operation and Casualty Operation of the Gun Console (GC)	10:1	(5/1)
S3706/1-1-1	Class	24	General, Physical and Documentation Description of the Recorder Reproducer (RCRP) Set MK 27	10:1	
DAY 4					
Topic No.	**Type**	**Period**	**Topic Title**	**Ratio**	**BottleNeck**
S3706/1-1-2	Class	25	Functional and Interface Description of the Recorder Reproducer (RCRP) Set MK 27	10:1	

COURSE MASTER SCHEDULE (Continued)

Topic No.	Type	Period	Topic Title	Ratio	BottleNeck
S3706/1-1-3	Class	26	Operational Description of the Recorder Reproducer (RCRP) Set MK 27	10:1	
S3706/1-2-1	Lab	27	Operation of the Recorder Reproducer (RCRP) Set MK 27	10:1	(5/1)
S3706/1-2-1	Lab	28	Operation of the Recorder Reproducer (RCRP) Set MK 27	10:1	(5/1)
S3706/1-3-1	Class	29	Operational Description of the Recorder Reproducer (RCRP) Set MK 27	10:1	
S4292/1-1-1	Class	30	General, Physical and Documentation Description of the Gun Console Computer (GCC) and Gun Mount Processor (GMP) AN/UYK-44(V)	10:1	
S4292/1-1-2	Class	31	Functional and Interface Description of the Gun Console Computer (GCC) and Gun Mount Processor (GMP) AN/UYK-44(V)	10:1	
S4292/1-1-3	Class	32	Operational Description of the Gun Console Computer (GCC) and Gun Mount Processor (GMP) AN/UYK-44(V)	10:1	
DAY 5					
Topic No.	**Type**	**Period**	**Topic Title**	**Ratio**	**BottleNeck**
S4292/1-2-1	Lab	33	Basic Operation of the Gun Console Computer (GCC) and Gun Mount Processor (GMP) AN/UYK-44(V)	10:1	(5/1)
S4292/1-2-1	Lab	34	Basic Operation of the Gun Console Computer (GCC) and Gun Mount Processor (GMP) AN/UYK-44(V)	10:1	(5/1)
S1277/1-1-1	Class	35	General, Physical, and Documentation Description of the Gun Mount Control Panel (GMCP) MK 437	10:1	
S1277/1-1-2	Class	36	Functional and Interface Description of the Gun Mount Control Panel (GMCP) MK 437	10:1	
S1273/2-1-1	Class	37	Operational Description of the Gun Weapon System (GWS) MK 34	10:1	

COURSE MASTER SCHEDULE (Continued)

Topic No.	Type	Period	Topic Title	Ratio	BottleNeck
S1273/2-1-2	Class	38	Operational Description of the Gun Weapon System (GWS) MK 34	10:1	
S1273/2-2-1	Lab	39	Basic Operation of the Gun Weapon System (GWS) MK 34	10:1	(5/1)
S1273/2-2-1	Lab	40	Basic Operation of the Gun Weapon System (GWS) MK 34	10:1	(5/1)

WEEK 2
DAY 1

Topic No.	Type	Period	Topic Title	Ratio	BottleNeck
S1273/2-2-1	Lab	41	Basic Operation of the Gun Weapon System (GWS) MK 34	10:1	(5/1)
S1273/2-2-1	Lab	42	Basic Operation of the Gun Weapon System (GWS) MK 34	10:1	(5/1)
S1273/3-1-1	Lab	43	Preventive Maintenance of the Gun Weapon System (GWS) MK 34	10:1	(5/1)
S1273/3-1-1	Lab	44	Preventive Maintenance of the Gun Weapon System (GWS) MK 34	10:1	(5/1)
S1274/2-1-1	Class	45	Operational Description of Gun Computer System (GCS) MK 160	10:1	
S1274/2-2-1	Lab	46	Operation of Gun Computer System (GCS) MK 160	10:1	(2/1)
S1274/2-2-1	Lab	47	Operation of Gun Computer System (GCS) MK 160	10:1	(2/1)
S1274/2-2-1	Lab	48	Operation of Gun Computer System (GCS) MK 160	10:1	(2/1)

FAULT APPLICABILITY LIST

PART	SECT	TOS	EQUIPMENT	FUNCTION FAULTED	FAULT NO.	DOCUMENT

Note 1: The PART and SECT columns indicate the most appropriate location within the curriculum to use the fault.

Note 2: The asterisk in the Fault No. column indicates that fault is required for use in the curriculum.

Note 3: Faults approved for dual use are noted in the TOS column.

TAB A-5

LESSON PLAN

Gun Computer System (GCS) MK 160 MOD 8/Optical Sight System (OSS) MK 46 MOD 1 Differences Course

LESSON PLAN

April 2006

PUBLISHED BY Commander, Center for Surface Combat Systems (CSCS) Dahlgren

LIST OF EFFECTIVE ELEMENTS

Element No.	Change In Effect	Element No.	Change In Effect	Element No.	Change In Effect
Title Page	Original	Tab Part S1273/1	Original	S1273/1-2-1-1 through S1273/1-2-1-7	Original
List of Effective Elements	Original	S1273/1-1	Original	Tab Part S1274/1	Original
Letter of Promulgation	Original	S1273/1-1-1	Original	S1274/1-1	Original
Change Record	Original	S1273/1-1-1-1 through S1273/1-1-1-11	Original	S1274/1-1-1	Original
Table of Contents	Original	S1273/1-1-2	Original	S1274/1-1-1-1 through S1274/1-1-1-11	Original
Security Awareness Notice	Original	S1273/1-1-2-1 through S1273/1-1-2-6	Original	S1274/1-1-2	Original
Safety/Hazard Awareness Notice	Original	S1273/1-1-3	Original	S1274/1-1-2-1 through S1274/1-1-2-6	Original
How to Use the Lesson Plan	Original	S1273/1-1-3-1 through S1273/1-1-3-7	Original	Tab Part S4291	Original
Allocation of Instructional Time	Original	S1273/1-2	Original	S4291-1	Original
CMS	Original	S1273/1-2-1	Original	S4291-1-1	Original
CLOs	Original				

LIST OF EFFECTIVE ELEMENTS - Continued.

Element No.	Change In Effect
S4292/1-1-2-1 through S4292/1-1-2-6	Original
S4292/1-1-3	Original
S4292/1-1-3-1 through S4292/1-1-3-7	Original
S4292/1-2	Original
S4292/1-2-1	Original
S4292/1-2-1-1 through S4292/1-2-1-6	Original
Tab Part S1277/1	Original
S1277/1-1	Original
S1277/1-1-1	Original
S1277/1-1-1-1 through S1277/1-1-1-10	Original

Element No.	Change In Effect
S1277/1-1-2	Original
S1277/1-1-2-1 through S1277/1-1-2-6	Original
Tab Part S1273/2	Original
S1273/2-1	Original
S1273/2-1-1	Original
S1273/2-1-1-1 through S1273/2-1-1-11	Original
S1273/2-1-2	Original
S1273/2-1-2-1 through S1273/2-1-2-4	Original
S1273/2-2	Original
S1273/2-2-1	Original

Element No.	Change In Effect
S1273/2-2-1-1 through S1273/2-2-1-5	Original
Tab Part S1273/3	Original
S1273/3-1	Original
S1273/3-1-1	Original
S1273/3-1-1-1 through S1273/3-1-1-5	Original
Tab Part S1274/2	Original
S1274/2-1	Original
S1274/2-1-1	Original
S1274/2-1-1-1 through S1274/2-1-1-7	Original
S1274/2-2	Original
S1274/2-2-1	Original

LETTER OF PROMULGATION

Letter of Promulgation

CHANGE RECORD

Number and Description of Change	Entered By	Date

TABLE OF CONTENTS

FRONT MATTER — Page

Title Page i
List of Effective Elements ii
Letter of Promulgation viii
Change Record ix
Table of Contents x
Security Awareness Notice xvii
Safety/Hazard Awareness Notice xviii
How to Use the Lesson Plan xx
Allocation of Instructional Time xxiv
Course Master Schedule xxx
Course Learning Objectives xxxix

PART S1273/1 GUN WEAPON SYSTEM (GWS) MK 34

Section

1. INTRODUCTION TO THE GUN WEAPON SYSTEM (GWS) MK 34 — S1273/1-1-1
   1. General, Physical, and Documentation Description of the Gun Weapon System (GWS) MK 34 — S1273/1-1-1-1
   2. Functional and Interface Description of the Gun Weapon System (GWS) MK 34 — S1273/1-1-2-1
   3. Operational Description of the Gun Weapon System (GWS) MK 34 — S1273/1-1-3-1
2. BASIC OPERATION OF THE GUN WEAPON SYSTEM (GWS) MK 34 — S1273/1-2-1
   1. Basic Operation of the Gun Weapon System (GWS) MK 34 — S1273/1-2-1-1

PART S1274/1 GUN COMPUTER SYSTEM (GCS) MK 160

Section

1. INTRODUCTION TO GUN COMPUTER SYSTEM (GCS) MK 160 — S1274/1-1-1
   1. General, Physical, and Documentation Description of Gun Computer System (GCS) MK 160 — S1274/1-1-1-1
   2. Functional and Interface Description of Gun Computer System (GCS) MK 160 — S1274/1-1-2-1

PART S4291 GUN CONSOLE (GC)

Section

1. INTRODUCTION TO THE GUN CONSOLE (GC) — S4291-1-1
   1. General, Physical, and Documentation Description of the Gun Console (GC) — S4291-1-1-1
   2. Functional and Interface Description of the Gun Console (GC) — S4291-1-2-1
   3. Operational Description of the Gun Console (GC) — S4291-1-3-1

TABLE OF CONTENTS - Continued.

	Page
2. THEORY OF THE GUN CONSOLE (GC)	S4291-2-1
1. Operational Description of the Gun Console (GC)	S4291-2-1-1
3. BASIC OPERATION OF THE GUN CONSOLE (GC)	S4291-3-1
1. Basic Operation and Casualty Operation of the Gun Console (GC)	S4291-3-1-1

PART S3706/1 RECORDER REPRODUCER (RCRP) SET MK 27

Section

1. INTRODUCTION TO THE RECORDER REPRODUCER (RCRP) SET MK 27	S3706/1-1-1
1. General, Physical and Documentation Description of the Recorder Reproducer (RCRP) Set MK 27	S3706/1-1-1-1
2. Functional and Interface Description of the Recorder Reproducer (RCRP) Set MK 27	S3706/1-1-2-1
3. Operational Description of the Recorder Reproducer (RCRP) Set MK 27	S3706/1-1-3-1
2. BASIC OPERATION OF THE RECORDER REPRODUCER (RCRP) SET MK 27	S3706/1-2-1
1. Operation of the Recorder Reproducer (RCRP) Set MK 27	S3706/1-2-1-1
3. THEORY OF THE RECORDER REPRODUCER (RCRP) SET MK 27	S3706/1-3-1
1. Operational Description of the Recorder Reproducer (RCRP) Set MK 27	S3706/1-3-1-1

PART S4292/1 GUN CONSOLE COMPUTER (GCC) AND GUN MOUNT PROCESSOR (GMP) AN/UYK-44(V)

Section

1. INTRODUCTION TO THE GUN CONSOLE COMPUTER (GCC) AND GUN MOUNT PROCESSOR (GMP) AN/UYK-44(V)	S4292/1-1-1
1. General, Physical and Documentation Description of the Gun Console Computer (GCC) and Gun Mount Processor (GMP) AN/UYK-44(V)	S4292/1-1-1-1
2. Functional and Interface Description of the Gun Console Computer (GCC) and Gun Mount Processor (GMP) AN/UYK-44(V)	S4292/1-1-2-1

TABLE OF CONTENTS - Continued.

Page

3. Operational Description of the Gun Console Computer (GCC) and Gun Mount Processor (GMP) AN/UYK-44(V) S4292/1-1-3-1

2. BASIC OPERATION OF THE GUN CONSOLE COMPUTER (GCC) AND GUN MOUNT PROCESSOR (GMP) AN/UYK-44(V) S4292/1-2-1

1. Basic Operation of the Gun Console Computer (GCC) and Gun Mount Processor (GMP) AN/UYK-44(V) S4292/1-2-1-1

PART S1277/1 GUN MOUNT CONTROL PANEL (GMCP) MK 437

Section

1. INTRODUCTION TO THE GUN MOUNT CONTROL PANEL (GMCP) MK 437 S1277/1-1-1

1. General, Physical, and Documentation Description of the Gun Mount Control Panel (GMCP) MK 437 S1277/1-1-1-1

2. Functional and Interface Description of the Gun Mount Control Panel (GMCP) MK 437 S1277/1-1-2-1

PART S1273/2 GUN WEAPON SYSTEM (GWS) MK 34

Section

1. THEORY OF THE GUN WEAPON SYSTEM (GWS) MK 34 S1273/2-1-1

1. Operational Description of the Gun Weapon System (GWS) MK 34 S1273/2-1-1-1

2. Operational Description of the Gun Weapon System (GWS) MK 34 S1273/2-1-2-1

2. OPERATION OF THE GUN WEAPON SYSTEM (GWS) MK 34 S1273/2-2-1

1. Basic Operation of the Gun Weapon System (GWS) MK 34 S1273/2-2-1-1

PART S1273/3 GUN WEAPON SYSTEM (GWS) MK 34

Section

1. PREVENTIVE MAINTENANCE OF THE GUN WEAPON SYSTEM (GWS) MK 34 S1273/3-1-1

1. Preventive Maintenance of the Gun Weapon System (GWS) MK 34 S1273/3-1-1-1

PART S1274/2 GUN COMPUTER SYSTEM (GCS) MK 160

Section

1. INTRODUCTION TO GUN COMPUTER SYSTEM (GCS) MK 160 S1274/2-1-1

TABLE OF CONTENTS - Continued.

Page

2. Basic Corrective Maintenance of Gun Mount Control Panel (GMCP) MK 437 S1277/3-3-2-1

PART S3706/3 RECORDER REPRODUCER (RCRP) SET MK 27

Section

1. THEORY OF THE RECORDER REPRODUCER (RCRP) SET MK 27 S3706/3-1-1

1. Maintenance Description of the Recorder Reproducer (RCRP) Set MK 27 S3706/3-1-1-1

PART S3706/4 RECORDER REPRODUCER (RCRP) SET MK 27

Section

1. PREVENTIVE AND BASIC CORRECTIVE MAINTENANCE OF THE RECORDER REPRODUCER (RCRP) SET MK 27 S3706/4-1-1

1. Preventive Maintenance of the Recorder Reproducer (RCRP) Set MK 27 S3706/4-1-1-1

2. Basic Corrective Maintenance of the Recorder Reproducer (RCRP) Set MK 27 S3706/4-1-2-1

PART S4292/2 GUN CONSOLE COMPUTER (GCC) AND GUN MOUNT PROCESSOR (GMP) AN/UYK-44(V)

Section

Page

1. THEORY OF THE GUN CONSOLE COMPUTER (GCC) AND GUN MOUNT PROCESSOR (GMP) AN/UYK-44(V) S4292/2-1-1

1. Maintenance Description of Gun Console Computer (GCC) and Gun Mount Processor (GMP) AN/UYK-44(V) S4292/2-1-1-1

2. PREVENTIVE AND BASIC CORRECTIVE MAINTENANCE OF THE GUN CONSOLE COMPUTER (GCC) AND GUN MOUNT PROCESSOR (GMP) AN/UYK-44(V) S4292/2-2-1

1. Preventive Maintenance of the Gun Console Computer (GCC) and Gun Mount Processor (GMP) AN/UYK-44(V) S4292/2-2-1-1

2. Basic Corrective Maintenance of the Gun Console Computer (GCC) and Gun Mount Processor (GMP) AN/UYK-44(V) S4292/2-2-2-1

PART S1274/3 GUN COMPUTER SYSTEM (GCS) MK 160

Section

1. PREVENTIVE AND BASIC CORRECTIVE MAINTENANCE OF THE GUN COMPUTER SYSTEM (GCS) MK 160 S1274/3-1-1

1. Preventive Maintenance of the Gun Computer System (GCS) MK 160 S1274/3-1-1-1

TABLE OF CONTENTS - Continued.

Page

2. Basic Corrective Maintenance of the Gun Computer System (GCS) MK 160 S1274/3-1-2-1

PART S1273/4 GUN WEAPON SYSTEM (GWS) MK 34

Section

1. PREVENTIVE AND BASIC CORRECTIVE MAINTENANCE OF THE GUN WEAPON SYSTEM (GWS) MK 34 S1273/4-1-1

1. Basic Corrective Maintenance of Gun Weapon System (GWS) MK 34 S1273/4-1-1-1

PART S2789 OPTICAL SIGHT SYSTEM (OSS) MK 46

Section

1. INTRODUCTION TO THE OPTICAL SIGHT SYSTEM (OSS) MK 46 S2789-1-1

1. General and Documentation Description of the Optical Sight System (OSS) MK 46 S2789-1-1-1

2. Physical Description of the Optical Sight System (OSS) MK 46 S2789-1-2-1

3. Functional and Interface Description of the Optical Sight System (OSS) MK 46 S2789-1-3-1

4. Operational Description of the Optical Sight System (OSS) MK 46 S2789-1-4-1

2. BASIC OPERATION OF THE OPTICAL SIGHT SYSTEM (OSS) MK 46 S2789-2-1

1. Basic Operation of Optical Sight System (OSS) MK 46 S2789-2-1-1

3. THEORY OF THE OPTICAL SIGHT SYSTEM (OSS) MK 46 S2789-3-1

1. Casualty Operational Description of the Optical Sight System (OSS) MK 46 S2789-3-1-1

2. Maintenance Description of the Optical Sight System (OSS) MK 46 S2789-3-2-1

4. OPERATION OF THE OPTICAL SIGHT SYSTEM (OSS) MK 46 S2789-4-1

1. Casualty Operation of the Optical Sight System (OSS) MK 46 S2789-4-1-1

5. PREVENTIVE AND BASIC CORRECTIVE MAINTENANCE OF THE OPTICAL SIGHT SYSTEM (OSS) MK 46 S2789-5-1

TABLE OF CONTENTS - Continued.

		Page
1.	Preventive Maintenance of the Optical Sight System (OSS) MK 46	S2789-5-1-1
2.	Basic Corrective Maintenance of the Optical Sight System (OSS) MK 46	S2789-5-2-1

REFERENCE MATERIAL

	Page
Resource Requirements List	(1)
Profile Item-To-Topic Objective Assignment Chart	(7)
Fault Applicability List	(14)

SECURITY AWARENESS NOTICE

None

SAFETY/HAZARD AWARENESS NOTICE

All personnel involved in operation or maintenance of electronic equipment must be thoroughly familiar with the electronic equipment safety precautions contained in Electronic Installation and Maintenance Book, General, NAVSEA SE000-00-EIM-100, Section 3, and Naval Ships' Technical Manual, Chapter 300, S9086-KC-STM-010/CH-300, Section 2. In addition, attention is directed to the Navy Safety Program Instructions, OPNAVINST 5100.19 (series) and 5100.23 (series), and the safety training requirements contained in CNETINST 1500.20 (series).

This equipment employs voltages which are dangerous and may be fatal if contacted by operating or maintenance personnel. There are mechanical safety devices associated with this equipment that must be maintained in a constant state of readiness to preclude causing injury to personnel and/or damage to equipment. Extreme caution must be exercised when working with or handling this equipment. Some components are extremely heavy. Rigid pre-inspections must be made to handling equipment to ensure their safety and safety summaries must be read to the handling teams prior to conducting dangerous evolutions. Hazard awareness dictates that this equipment must always be viewed as an integral part of a system and not as a component. While every practical precaution has been incorporated into this equipment, it is not possible or practical to try to list every condition or hazard that you may encounter. Therefore, all operating or maintenance personnel must at all times observe as a minimum, the following:

DON'T SERVICE OR ADJUST ALONE

Under no circumstances will a person operate or maintain equipment without the immediate presence or assistance of another person capable of rendering aid. Unless under direct supervision of a qualified person, no person shall operate or maintain equipment for which he is unqualified.

DON'T TAMPER WITH INTERLOCKS

Reliance on interlock circuits to remove power from the equipment is never to be assumed. Until operation of the interlock is verified, equipment is assumed to be in the hazardous mode of operation. Under no circumstances will any access gate, door, or interlock switch be removed, bypassed, or modified in any way by other than authorized maintenance personnel and then only after observing proper tag-out procedures.

SAFETY/HAZARD AWARENESS NOTICE - Continued.

REPORT ALL HAZARDS

If at any time you detect a hazard, it is your responsibility to report the hazard to ensure that it is corrected. If at any time you detect a "new" or "suspected new" hazard, particularly due to equipment installation, modification, or repair, it is your responsibility to ensure that a SAFETYGRAM is submitted to the Naval Safety Center, Norfolk, VA, in accordance with OPNAVINST 5102.1 (series). This will ensure that this hazard will be investigated, publicized, or corrected, as required.

Additionally, SSPINST 3100.1 (series) requires SWS personnel to submit special check TFRs when a potential or actual unsafe condition is noticed that could cause injury to personnel and/or damage to equipment. When a problem/failure occurs involving the safety of personnel or equipment and it cannot be immediately resolved by command/technical assistance on-site, the TFR data shall be transmitted to SSP and others by Naval Message.

SAFETY - "TRAINING TIME OUT"

In any training situation when a student or instructor expresses concern for personal safety, it is an indication that a need for clarification of procedures or requirements exists and a "Training Time Out" shall be called. An individual should verbally call "TRAINING TIME OUT" (TTO) if they detect a hazardous condition during any teaching session (lab or theory), or raise a clenched fist to indicate a "TRAINING TIME OUT" (TTO) if the verbal command cannot be heard. Training activities will be suspended until the hazardous situation has been examined and additional explanation and instruction has been provided to allow safe resumption of training. Caution should be used to ensure a halt to a procedure does not result in additional hazards. TTO follow-up procedures will be performed in accordance with CNET Instruction 1500.20(Series).

HOW TO USE THE LESSON PLAN

COMPOSITION OF THE LESSON PLAN

This Lesson Plan provides an instructor with the information required to prepare for, and instruct in, the topics assigned. As an introduction to each topic, the instructor shall display his/her name and the topic title on the chalkboard. The instructor will also inform the trainees of the Topic Learning Objectives, establish classroom procedures (questioning, note taking, breaks, etc.), and motivate the trainee by emphasizing the importance of the topic. At the end of each day of instruction, the instructor will assign the trainees all materials required in preparation for the following day. Each topic within this Lesson Plan contains the following:

1. Topic Learning Objectives. These objectives are written to reflect the training level(s) of Personnel Performance Profiles (PPPs) that the topic supports. The objectives are derived by applying elements of the Training Objective Statements (TOS) to the elements of the PPPs.

2. Trainee Preparation. This portion assigns the study and review material that the trainee must complete to prepare for this topic. It contains detailed assignments in reference publications, diagrams, and support materials, and is assigned at the end of each day of instruction. The instructor must review the Trainee Preparation portion of the topics planned for the following day and make study assignments accordingly.

3. Instructor Preparation. This part of the topic page contains:

   a. A reminder to review assigned trainee material,

   b. A list of all reference materials required by the instructor to prepare for instructing a topic.

   c. A list of all trainee materials required for the topic including reference, equipment, support materials, and test equipment.

4. Discussion-Demonstration-Activities. This page is divided into two columns, as follows:

   a. Discussion Point. This column outlines the subject matter to the depth necessary to support the training level(s) of the corresponding topic learning objective. Also, sufficient space is provided for instructor personalization.

HOW TO USE THE LESSON PLAN - Continued.

b. Related Instructor Activity. This column lists specific instructor activities, excluding oral discussion, which will aid in trainee learning. This Related Instructor Activity column provides the instructor specific instructions relative to reference documents, instructional media material, and guidance regarding trainee behavior during presentation of instruction. These activities carry the same number as the discussion points to which they are related. As with the discussion points, space is left for the instructor to add personalizing notes. The phrase "Reference ..." is used to help the instructor locate information applicable to a particular discussion point and direct the instructor to use that reference material in the classroom. The term "Refer to ..." provides direction for the instructor when the reference material is actually intended for use in the classroom. If there is no related instructor activity for a discussion point, the space is left blank and the number omitted.

FUNCTION OF THE LESSON PLAN

The Lesson Plan expands the approved Curriculum Outline of Instruction into a content format that will serve as an effective plan for instruction. It provides room for instructors to add individual notes. The form of the lesson plan facilitates preparation, minimizes deviation from the approved plan for the topic, and lessens the need for rewriting material already contained in the outline. As the instructors prepare to teach the topic for the first time, they may write in the technical data, information, or notes to be used to do a professional job of instruction. As instructors gain experience teaching a topic, they may modify and improve the data written in.

All theory discussions must relate to practical work. The design theory of an equipment may be interesting to the instructor, but the trainee must learn how to keep the equipment in proper operating condition. The trainee must bypass all unnecessary knowledge and concentrate on learning to perform the necessary maintenance techniques required by these equipments. Any activity that does not contribute directly to training in the operation and maintenance of these equipments is wasted effort, regardless of how interesting it may seem to be. A thorough understanding of the equipment theory is necessary in order that the practical work on the equipment may be accomplished. The reason for the theory is to assist the trainee in doing practical work.

A Lesson Plan without the instructor's personalization is maintained in the appropriate school offices and has several administrative functions. The Officer-in-Charge and the course supervisors will use it as a guide in determining the kind and depth of the material taught, and as a reference in monitoring the effectiveness of instruction. Each instructor will use it as a reference to determine what the trainees have learned prior to, and will learn subsequent to the topic, so that the instructor can gauge the level and direction of instruction. When approved by the Chief of Naval Education and Training, this Lesson Plan becomes the master plan for instruction.

HOW TO USE THE LESSON PLAN - Continued.

USE OF THE LESSON PLAN

When issued to an instructor, this lesson plan becomes his/her personal property, subject only to the regulations that govern classified matter. Each instructor will make handwritten entries in the spaces provided. Personalized topics may be passed on to a relieving instructor. However, they are to be used only for reference purposes in developing a personalized Lesson Plan.

Changes to this plan are made by direction of the Chief of Naval Education and Training through recommendations by the school and from the results of the training evaluation program. All changes shall ensure effective trainee comprehension and fulfillment of topic learning objectives.

STUDY ASSIGNMENTS

Study assignments are provided in the Lesson Plan. One of the objectives of the training is learning to intelligently use the technical manuals associated with the equipments. Training effectiveness depends on conscientious and consistent use of the assignments and schematics in the pertinent technical manuals. All completed assignments should be reviewed with the trainee at the first opportunity.

EQUIPMENT FAULTS

The Fault Applicability List in the Lesson Plan lists the faults/fault insertion devices required in this course. When desirable, additional faults may be selected from the Fault Applicability List.

INSTRUCTION SHEETS, EXAMINATIONS, QUIZZES

Instruction Sheets, consisting of Information Sheets, Job Sheets, Assignment Sheets, Problem Sheets, and Diagram Sheets are an integral part of the course and aid trainees in achieving the topic learning objectives. It is necessary to see that these activities are accurately completed.

Answers to questions on the sheets are provided on the Answer Sheet at the back of each Lesson Plan. Students should be instructed to write only on Trainee Name Page, Job Sheets, Diagram Sheets, and Problem Sheets. New Trainee Name Pages, Job Sheets, Diagram Sheets, and Problem Sheets will be reproduced and inserted so the Trainee Guide and Instruction Sheets may be used in the next course.

HOW TO USE THE LESSON PLAN - Continued.

Quizzes and examinations are administered to monitor trainee comprehension at the completion of significant areas of instruction.

DIVISION OF COURSE MATERIALS INTO FUNCTIONAL PARTS

The course material in the Lesson Plan has been divided into parts to support PPP tables as assigned by the corresponding Table Assignment Charts. It has been further divided into sections to support instruction on theory, operation, preventive maintenance, and corrective maintenance. The sequence of instruction is based on an analysis of the tasks for trainee performance and on the requirements for prerequisite knowledge or skills required for instruction on the more complex equipments.

TRAINING MATERIAL SUPPORT PROGRAM

The Training Material Support Program has been established for the purpose of improving the curriculum and other training materials. It is each instructor's responsibility to become familiar with this program as outlined in the applicable management documentation. You are to submit all your suggestions for improvement through a Change Recommendation as outlined in the applicable management documentation. These suggestions should include discrepancies found or any comments that you feel will improve training. There will be no changes in this curriculum until authorized by the Chief of Naval Education and Training.

SAFETY PRECAUTIONS

Voltages present in the equipment are extremely dangerous. The delicacy of some equipment and the stringent ventilation requirements for solid-state electronic circuits must be continuously stressed. Safety must be part of each day of training so that the trainee will develop safe working habits. Practice and Teach Safety!

ALLOCATION OF INSTRUCTIONAL TIME

Part No.	Section No.	Topic No.	Classroom Hours	Laboratory Hours	Topic Totals
S1273/1	1	1	1.00	0.00	
		2	4.00	0.00	
		3	3.00	0.00	
		Section Total	8.00	0.00	8.00
S1273/1	2	1	0.00	5.00	
		Section Total	0.00	5.00	5.00
S1274/1	1	1	2.00	0.00	
		2	2.00	0.00	
		Section Total	4.00	0.00	4.00
S4291	1	1	1.00	0.00	
		2	1.00	0.00	
		3	1.00	0.00	
		Section Total	3.00	0.00	3.00
S4291	2	1	1.00	0.00	
		Section Total	1.00	0.00	1.00
S4291	3	1	0.00	2.00	
		Section Total	0.00	2.00	2.00

ALLOCATION OF INSTRUCTIONAL TIME - Continued.

Part No.	Section No.	Topic No.	Classroom Hours	Laboratory Hours	Topic Totals
S1277/2	1	1	1.00	0.00	
		Section Total	1.00	0.00	1.00
S1277/3	1	1	0.00	2.00	
		Section Total	0.00	2.00	2.00
S1277/3	2	1	1.00	0.00	
		Section Total	1.00	0.00	1.00
S1277/3	3	1	0.00	2.00	
		2	0.00	0.00	
		Section Total	0.00	2.00	2.00
S3706/3	1	1	1.00	0.00	
		Section Total	1.00	0.00	1.00
S3706/4	1	1	0.00	2.00	
		2	0.00	2.00	
		Section Total	0.00	4.00	4.00
S4292/2	1	1	1.00	0.00	
		Section Total	1.00	0.00	1.00

ALLOCATION OF INSTRUCTIONAL TIME - Continued.

Part No.	Section No.	Topic No.	Classroom Hours	Laboratory Hours	Topic Totals
S4292/2	2	1	0.00	2.00	
		2	0.00	5.00	
		Section Total	0.00	7.00	7.00
S1274/3	1	1	0.00	2.00	
		2	1.00	0.00	
		Section Total	1.00	2.00	3.00
S1273/4	1	1	0.00	2.00	
		Section Total	0.00	2.00	2.00
S2789	1	1	1.00	0.00	
		2	1.00	0.00	
		3	11.00	0.00	
		4	2.00	0.00	
		Section Total	15.00	0.00	15.00
S2789	2	1	0.00	5.00	
		Section Total	0.00	5.00	5.00
S2789	3	1	1.00	0.00	
		2	1.00	0.00	
		Section Total	2.00	0.00	2.00

ALLOCATION OF INSTRUCTIONAL TIME - Continued.

Part No.	Section No.	Topic No.	Classroom Hours	Laboratory Hours	Topic Totals
S2789	4	1	0.00	2.00	
		Section Total	0.00	2.00	2.00
S2789	5	1	0.00	5.00	
		2	0.00	11.00	
		Section Total	0.00	16.00	16.00
		Final Eval		0.00	0.00
		Instructional Time Total			119.00
		Testing Time Total			1.00
		Review Time Total			0.00
		Course Total			120.00

Note

Classroom and laboratory hours shown reflect the time used during curriculum pilot with an actual class size of 10 and a student/instructor ratio for laboratory periods of 10:1. These times may vary slightly at different activities due to different class loading or available resources. Actual times should be reflected on each activity's course master schedule.

COURSE MASTER SCHEDULE

A-113-0125

WEEK 1

Length of period : 50 minutes

DAY 1

Topic No.	Type	Period	Topic Title	Ratio	BottleNeck
S1273/1-1-1	Class	1	General, Physical, and Documentation Description of the Gun Weapon System (GWS) MK 34	10:1	
S1273/1-1-2	Class	2	Functional and Interface Description of the Gun Weapon System (GWS) MK 34	10:1	
S1273/1-1-2	Class	3	Functional and Interface Description of the Gun Weapon System (GWS) MK 34	10:1	
S1273/1-1-2	Class	4	Functional and Interface Description of the Gun Weapon System (GWS) MK 34	10:1	
S1273/1-1-2	Class	5	Functional and Interface Description of the Gun Weapon System (GWS) MK 34	10:1	
S1273/1-1-3	Class	6	Operational Description of the Gun Weapon System (GWS) MK 34	10:1	
S1273/1-1-3	Class	7	Operational Description of the Gun Weapon System (GWS) MK 34	10:1	
S1273/1-1-3	Class	8	Operational Description of the Gun Weapon System (GWS) MK 34	10:1	

DAY 2

Topic No.	Type	Period	Topic Title	Ratio	BottleNeck
S1273/1-2-1	Lab	9	Basic Operation of the Gun Weapon System (GWS) MK 34	10:1	(2/1)
S1273/1-2-1	Lab	10	Basic Operation of the Gun Weapon System (GWS) MK 34	10:1	(2/1)

COURSE MASTER SCHEDULE - Continued.

Topic No.	Type	Period	Topic Title	Ratio	BottleNeck
S1273/1-2-1	Lab	11	Basic Operation of the Gun Weapon System (GWS) MK 34	10:1	(2/1)
S1273/1-2-1	Lab	12	Basic Operation of the Gun Weapon System (GWS) MK 34	10:1	(2/1)
S1273/1-2-1	Lab	13	Basic Operation of the Gun Weapon System (GWS) MK 34	10:1	(2/1)
S1274/1-1-1	Class	14	General, Physical, and Documentation Description of Gun Computer System (GCS) MK 160	10:1	
S1274/1-1-1	Class	15	General, Physical, and Documentation Description of Gun Computer System (GCS) MK 160	10:1	
S1274/1-1-2	Class	16	Functional and Interface Description of Gun Computer System (GCS) MK 160	10:1	
DAY 3					
Topic No.	**Type**	**Period**	**Topic Title**	**Ratio**	**BottleNeck**
S1274/1-1-2	Class	17	Functional and Interface Description of Gun Computer System (GCS) MK 160	10:1	
S4291-1-1	Class	18	General, Physical, and Documentation Description of the Gun Console (GC)	10:1	
S4291-1-2	Class	19	Functional and Interface Description of the Gun Console (GC)	10:1	
S4291-1-3	Class	20	Operational Description of the Gun Console (GC)	10:1	
S4291-2-1	Class	21	Operational Description of the Gun Console (GC)	10:1	
S4291-3-1	Lab	22	Basic Operation and Casualty Operation of the Gun Console (GC)	10:1	(5/1)
S4291-3-1	Lab	23	Basic Operation and Casualty Operation of the Gun Console (GC)	10:1	(5/1)
S3706/1-1-1	Class	24	General, Physical and Documentation Description of the Recorder Reproducer (RCRP) Set MK 27	10:1	

COURSE MASTER SCHEDULE - Continued.

DAY 4

Topic No.	Type	Period	Topic Title	Ratio	BottleNeck
S3706/1-1-2	Class	25	Functional and Interface Description of the Recorder Reproducer (RCRP) Set MK 27	10:1	
S3706/1-1-3	Class	26	Operational Description of the Recorder Reproducer (RCRP) Set MK 27	10:1	
S3706/1-2-1	Lab	27	Operation of the Recorder Reproducer (RCRP) Set MK 27	10:1	(5/1)
S3706/1-2-1	Lab	28	Operation of the Recorder Reproducer (RCRP) Set MK 27	10:1	(5/1)
S3706/1-3-1	Class	29	Operational Description of the Recorder Reproducer (RCRP) Set MK 27	10:1	
S4292/1-1-1	Class	30	General, Physical and Documentation Description of the Gun Console Computer (GCC) and Gun Mount Processor (GMP) AN/UYK-44(V)	10:1	
S4292/1-1-2	Class	31	Functional and Interface Description of the Gun Console Computer (GCC) and Gun Mount Processor (GMP) AN/UYK-44(V)	10:1	
S4292/1-1-3	Class	32	Operational Description of the Gun Console Computer (GCC) and Gun Mount Processor (GMP) AN/UYK-44(V)	10:1	

DAY 5

Topic No.	Type	Period	Topic Title	Ratio	BottleNeck
S4292/1-2-1	Lab	33	Basic Operation of the Gun Console Computer (GCC) and Gun Mount Processor (GMP) AN/UYK-44(V)	10:1	(5/1)
S4292/1-2-1	Lab	34	Basic Operation of the Gun Console Computer (GCC) and Gun Mount Processor (GMP) AN/UYK-44(V)	10:1	(5/1)
S1277/1-1-1	Class	35	General, Physical, and Documentation Description of the Gun Mount Control Panel (GMCP) MK 437	10:1	
S1277/1-1-2	Class	36	Functional and Interface Description of the Gun Mount Control Panel (GMCP) MK 437	10:1	

COURSE MASTER SCHEDULE - Continued.

Topic No.	Type	Period	Topic Title	Ratio	BottleNeck
S1273/2-1-1	Class	37	Operational Description of the Gun Weapon System (GWS) MK 34	10:1	
S1273/2-1-2	Class	38	Operational Description of the Gun Weapon System (GWS) MK 34	10:1	
S1273/2-2-1	Lab	39	Basic Operation of the Gun Weapon System (GWS) MK 34	10:1	(5/1)
S1273/2-2-1	Lab	40	Basic Operation of the Gun Weapon System (GWS) MK 34	10:1	(5/1)

WEEK 2
DAY 1

Topic No.	Type	Period	Topic Title	Ratio	BottleNeck
S1273/2-2-1	Lab	41	Basic Operation of the Gun Weapon System (GWS) MK 34	10:1	(5/1)
S1273/2-2-1	Lab	42	Basic Operation of the Gun Weapon System (GWS) MK 34	10:1	(5/1)
S1273/3-1-1	Lab	43	Preventive Maintenance of the Gun Weapon System (GWS) MK 34	10:1	(5/1)
S1273/3-1-1	Lab	44	Preventive Maintenance of the Gun Weapon System (GWS) MK 34	10:1	(5/1)
S1274/2-1-1	Class	45	Operational Description of Gun Computer System (GCS) MK 160	10:1	
S1274/2-2-1	Lab	46	Operation of Gun Computer System (GCS) MK 160	10:1	(2/1)
S1274/2-2-1	Lab	47	Operation of Gun Computer System (GCS) MK 160	10:1	(2/1)
S1274/2-2-1	Lab	48	Operation of Gun Computer System (GCS) MK 160	10:1	(2/1)

COURSE MASTER SCHEDULE - Continued.

DAY 2

Topic No.	Type	Period	Topic Title	Ratio	BottleNeck
S1274/2-2-1	Lab	49	Operation of Gun Computer System (GCS) MK 160	10:1	(2/1)
S1274/2-2-1	Lab	50	Operation of Gun Computer System (GCS) MK 160	10:1	(2/1)
S1274/2-2-2	Class	51	Maintenance Description of Gun Computer System (GCS) MK 160	10:1	
S1274/2-3-1	Lab	52	Casualty Operation of Gun Computer System (GCS) MK 160	10:1	(5/1)
S1274/2-3-1	Lab	53	Casualty Operation of Gun Computer System (GCS) MK 160	10:1	(5/1)
S3706/2-1-1	Lab	54	Operation of the Recorder Reproducer (RCRP) Set MK 27	10:1	(5/1)
S3706/2-1-1	Lab	55	Operation of the Recorder Reproducer (RCRP) Set MK 27	10:1	(5/1)
S1277/2-1-1	Class	56	Operational Description of the Gun Mount Control Panel (GMCP) MK 437	10:1	

DAY 3

Topic No.	Type	Period	Topic Title	Ratio	BottleNeck
S1277/3-1-1	Lab	57	Basic Operation of the Gun Mount Control Panel (GMCP) MK 437	10:1	(5/1)
S1277/3-1-1	Lab	58	Basic Operation of the Gun Mount Control Panel (GMCP) MK 437	10:1	(5/1)
S1277/3-2-1	Class	59	Maintenance Description of Gun Mount Control Panel (GMCP) MK 437	10:1	
S1277/3-3-1	Lab	60	Preventive Maintenance of Gun Mount Control Panel (GMCP) MK 437	10:1	(5/1)

COURSE MASTER SCHEDULE - Continued.

Topic No.	Type	Period	Topic Title	Ratio	BottleNeck
S1277/3-3-1	Lab	61	Preventive Maintenance of Gun Mount Control Panel (GMCP) MK 437	10:1	(5/1)
S1277/3-3-2	Lab	62	Basic Corrective Maintenance of Gun Mount Control Panel (GMCP) MK 437	10:1	(5/1)
S1277/3-3-2	Lab	63	Basic Corrective Maintenance of Gun Mount Control Panel (GMCP) MK 437	10:1	(5/1)
S3706/3-1-1	Class	64	Maintenance Description of the Recorder Reproducer (RCRP) Set MK 27	10:1	
DAY 4					
Topic No.	**Type**	**Period**	**Topic Title**	**Ratio**	**BottleNeck**
S3706/4-1-1	Lab	65	Preventive Maintenance of the Recorder Reproducer (RCRP) Set MK 27	10:1	(5/1)
S3706/4-1-1	Lab	66	Preventive Maintenance of the Recorder Reproducer (RCRP) Set MK 27	10:1	(5/1)
S3706/4-1-2	Lab	67	Basic Corrective Maintenance of the Recorder Reproducer (RCRP) Set MK 27	10:1	(5/1)
S3706/4-1-2	Lab	68	Basic Corrective Maintenance of the Recorder Reproducer (RCRP) Set MK 27	10:1	(5/1)
S4292/2-1-1	Class	69	Maintenance Description of Gun Console Computer (GCC) and Gun Mount Processor (GMP) AN/UYK-44(V)	10:1	
S4292/2-2-1	Lab	70	Preventive Maintenance of the Gun Console Computer (GCC) and Gun Mount Processor (GMP) AN/UYK-44(V)	10:1	(5/1)
S4292/2-2-1	Lab	71	Preventive Maintenance of the Gun Console Computer (GCC) and Gun Mount Processor (GMP) AN/UYK-44(V)	10:1	(5/1)
S4292/2-2-2	Lab	72	Basic Corrective Maintenance of the Gun Console Computer (GCC) and Gun Mount Processor (GMP) AN/UYK-44(V)	10:1	(2/1)

COURSE MASTER SCHEDULE - Continued.

DAY 5

Topic No.	Type	Period	Topic Title	Ratio	BottleNeck
S4292/2-2-2	Lab	73	Basic Corrective Maintenance of the Gun Console Computer (GCC) and Gun Mount Processor (GMP) AN/UYK-44(V)	10:1	(2/1)
S4292/2-2-2	Lab	74	Basic Corrective Maintenance of the Gun Console Computer (GCC) and Gun Mount Processor (GMP) AN/UYK-44(V)	10:1	(2/1)
S4292/2-2-2	Lab	75	Basic Corrective Maintenance of the Gun Console Computer (GCC) and Gun Mount Processor (GMP) AN/UYK-44(V)	10:1	(2/1)
S4292/2-2-2	Lab	76	Basic Corrective Maintenance of the Gun Console Computer (GCC) and Gun Mount Processor (GMP) AN/UYK-44(V)	10:1	(2/1)
S1274/3-1-1	Lab	77	Preventive Maintenance of the Gun Computer System (GCS) MK 160	10:1	(5/1)
S1274/3-1-1	Lab	78	Preventive Maintenance of the Gun Computer System (GCS) MK 160	10:1	(5/1)
S1274/3-1-2	Class	79	Basic Corrective Maintenance of the Gun Computer System (GCS) MK 160	10:1	
S1273/4-1-1	Lab	80	Basic Corrective Maintenance of Gun Weapon System (GWS) MK 34	10:1	(5/1)

WEEK 3
DAY 1

Topic No.	Type	Period	Topic Title	Ratio	BottleNeck
S1273/4-1-1	Lab	81	Basic Corrective Maintenance of Gun Weapon System (GWS) MK 34	10:1	(5/1)
S2789-1-1	Class	82	General and Documentation Description of the Optical Sight System (OSS) MK 46	10:1	
S2789-1-2	Class	83	Physical Description of the Optical Sight System (OSS) MK 46	10:1	
S2789-1-3	Class	84	Functional and Interface Description of the Optical Sight System (OSS) MK 46	10:1	
S2789-1-3	Class	85	Functional and Interface Description of the Optical Sight System (OSS) MK 46	10:1	
S2789-1-3	Class	86	Functional and Interface Description of the Optical Sight System (OSS) MK 46	10:1	

COURSE LEARNING OBJECTIVES

Upon successful completion of this course, the trainees will have acquired the following knowledge and skills and be able to:

Knowledge:

1. Describe the theory and associated documentation necessary to support and understand the performance of casualty/degraded/abnormal operational tasks and operational tasks requiring advanced analysis, all routine preventive maintenance, and documented fault isolation and repair without going into detailed logic, circuit analysis, individual program flow diagrams, or detailed mechanical component breakdown of the
   a. Gun Weapon System (GWS) MK 34
   b. Gun Computer System (GCS) MK 160
   c. Gun Mount Control Panel (GMCP) MK 437
   d. Optical Sight System (OSS) MK 46
   e. Recorder Reproducer (RCRP) Set MK 27
   f. Gun Console (GC)
   g. Gun Console Computer (GCC) and Gun Mount Processor (GMP) AN/UYK-44(V)

Skills:

1. Perform normal operational procedures with supervision on the
   a. Gun Mount Control Panel (GMCP) MK 437
   b. Gun Console (GC)
   c. Gun Console Computer (GCC) and Gun Mount Processor (GMP) AN/UYK-44(V)

2. Perform all operational procedures with supervision on the
   a. Gun Weapon System (GWS) MK 34
   b. Gun Computer System (GCS) MK 160
   c. Optical Sight System (OSS) MK 46
   d. Recorder Reproducer (RCRP) Set MK 27

3. Perform preventive maintenance procedures with supervision on the
   a. Gun Weapon System (GWS) MK 34
   b. Gun Computer System (GCS) MK 160
   c. Gun Mount Control Panel (GMCP) MK 437
   d. Optical Sight System (OSS) MK 46
   e. Recorder Reproducer (RCRP) Set MK 27
   f. Gun Console Computer (GCC) and Gun Mount Processor (GMP) AN/UYK-44(V)

COURSE LEARNING OBJECTIVES - Continued.

Skills:

4. Perform documented fault isolation and repair procedures to the authorized maintenance level, with supervision, on the
   a. Gun Weapon System (GWS) MK 34
   b. Gun Computer System (GCS) MK 160
   c. Optical Sight System (OSS) MK 46
   d. Recorder Reproducer (RCRP) Set MK 27
   e. Gun Console Computer (GCC) and Gun Mount Processor (GMP) AN/UYK-44(V)

PART S1273/1

GUN WEAPON SYSTEM (GWS) MK 34

Section 1. INTRODUCTION TO THE GUN WEAPON SYSTEM (GWS) MK 34 (T1)
Section 2. BASIC OPERATION OF THE GUN WEAPON SYSTEM (GWS) MK 34 (O1)

Section 1: INTRODUCTION TO THE GUN WEAPON SYSTEM (GWS) MK 34

Topic No.	Topic Title	Page
1	General, Physical, and Documentation Description of the Gun Weapon System (GWS) MK 34	S1273/1-1-1-1
2	Functional and Interface Description of the Gun Weapon System (GWS) MK 34	S1273/1-1-2-1
3	Operational Description of the Gun Weapon System (GWS) MK 34	S1273/1-1-3-1

LESSON PLAN

1. INTRODUCTION TO THE GUN WEAPON SYSTEM (GWS) MK 34 — A-113-0125

1. GENERAL, PHYSICAL, AND DOCUMENTATION DESCRIPTION OF THE GUN WEAPON SYSTEM (GWS) MK 34

LAB PERIODS: 0
CLASS PERIODS: 1

Topic Learning Objectives

Upon successful completion of this topic, the trainee will be able to:

1. State the purpose of the Gun Weapon System (GWS) MK 34 to the detail required to support normal operation.

2. Describe the modification differences of the Gun Weapon System (GWS) MK 34 to the detail required to support normal operation.

3. Describe the organization, content, and use of the technical documentation provided for use with the Gun Weapon System (GWS) MK 34 to the detail required to support normal operation.

   a. SW221-A1-MMO-010

4. Define the abbreviations, terms, and symbols used with the Gun Weapon System (GWS) MK 34 to the detail required to support normal operation.

5. State the purpose of the major components of the Gun Weapon System (GWS) MK 34 to the detail required to support normal operation.

   a. Gun Computer System (GCS) MK 160
   b. Optical Sight System (OSS) MK 46
   c. Gun System MK 45

6. Describe the major components of the Gun Weapon System (GWS) MK 34 including name, nomenclature, physical appearance, reference designators, and location to the detail required to support normal operation.

   a. Gun Computer System (GCS) MK 160
   b. Optical Sight System (OSS) MK 46
   c. Gun System MK 45

7. State the operational characteristics and capabilities of the Gun Weapon System (GWS) MK 34 to the detail required to support normal operation.

8. Describe the controls, displays, indicators, and alarms of the Gun Weapon System (GWS) MK 34, including location and positions to the detail required to support normal operation.

9. State the security requirements of the Gun Weapon System (GWS) MK 34 to the detail required to support normal operation.

Trainee Preparation

A. Trainee Support Materials:
   1. None

B. Reference Publications:
   1. None

Instructor Preparation

PART S1273/2

GUN WEAPON SYSTEM (GWS) MK 34

Section 1. THEORY OF THE GUN WEAPON SYSTEM (GWS) MK 34 (T2)
Section 2. OPERATION OF THE GUN WEAPON SYSTEM (GWS) MK 34 (O2)

Section 1: THEORY OF THE GUN WEAPON SYSTEM (GWS) MK 34

Topic No.	Topic Title	Page
1	Operational Description of the Gun Weapon System (GWS) MK 34	S1273/2-1-1-1
2	Operational Description of the Gun Weapon System (GWS) MK 34	S1273/2-1-2-1

Topic Learning Objectives

Upon successful completion of this topic, the trainee will be able to:

1. Describe the personnel and equipment safety precautions that are to be observed during maintenance of the Gun Weapon System (GWS) MK 34 to the detail required to support preventive and documented corrective maintenance.

2. Define the maintenance philosophy for the Gun Weapon System (GWS) MK 34, including the maintenance policy and management plan to the detail required to support preventive and documented corrective maintenance.

   a. Preventive maintenance
   b. Corrective maintenance

3. Describe the preventive maintenance procedures contained in prescribed maintenance documentation for the Gun Weapon System (GWS) MK 34 to the detail required to support preventive and documented corrective maintenance.

4. Describe the operational tests and diagnostic programs contained in prescribed maintenance documentation for the Gun Weapon System (GWS) MK 34 to the detail required to support preventive and documented corrective maintenance.

5. Describe the recognition and interpretation of malfunction indications of the Gun Weapon System (GWS) MK 34 to the detail required to support preventive and documented corrective maintenance.

6. Describe the systematic fault isolation procedures contained in prescribed maintenance documentation for the Gun Weapon System (GWS) MK 34 to the detail required to support preventive and documented corrective maintenance.

7. Describe the disassembly, repair, and reassembly procedures contained in prescribed maintenance documentation for the Gun Weapon System (GWS) MK 34 to the detail required to support preventive and documented corrective maintenance.

8. Describe the post-repair procedures contained in prescribed maintenance documentation for the Gun Weapon System (GWS) MK 34 to the detail required to support preventive and documented corrective maintenance.

9. Describe alignment, adjustment, and calibration procedures for the Gun Weapon System (GWS) MK 34 to the detail required to support preventive and documented corrective maintenance.

Trainee Preparation

A. Trainee Support Materials:
   1. None

B. Reference Publications:
   1. None

Instructor Preparation

A. Review Assigned Trainee Material.

B. Reference Publications:
   1. MIP 4813/008 OPNAVINST 4790 (Series)
   2. SW221-A1-MMO-010
   3. SW224-A8-MMO-010

C. Training Materials Required:
   1. None

1. OPERATIONAL DESCRIPTION OF THE GUN WEAPON SYSTEM (GWS) MK 34

DISCUSSION POINT	RELATED INSTRUCTOR ACTIVITY
1. Personnel and equipment safety precautions.	1. Reference SW221–A1–MMO–010 Safety Summary.
2. GWS maintenance philosophy.	2. Reference SW224–A8–MMO–010 Paragraph 6-2. The GWS maintenance philosophy is created by NAVSUP Instruction, the level of installed COTS, and through the input of the is-service and design engineering agents.
a. Preventive maintenance	a. Reference SW221–A1–MMO–010 Chapter 5.
b. Corrective maintenance	b. Reference SW221–A1–MMO–010 Chapter 6.
3. GWS preventive maintenance procedures.	3. Reference MIP 4813/008 OPNAVINST 4790 (Series) and review GWS MRs.

DISCUSSION POINT	RELATED INSTRUCTOR ACTIVITY
4. GWS operational tests and diagnostic programs.	4. Reference SW221–A1–MMO–010 Paragraph 6-3. Reference SW224-A8-MMO-010, Paragraph 6-3.3.3.2; Table 6-15 through 6-15F, Table 6-17, Table 6-19 Figures 6-10 through 6-15, Figures 6-19 through 6-29.
5. GWS malfunction indications.	5. Reference SW221–A1–MMO–010 Table 6-1.
6. GWS systematic fault isolation.	6. Reference SW221–A1–MMO–010 Table 6-1.
7. GWS disassembly, repair, and reassembly.	7. The GWS is made up of three constituent systems. Refer to the corresponding technical documentation for the system in which the fault is indicated.
8. GWS post-repair.	8. The GWS is made up of three constituent systems. Refer to the corresponding technical documentation for the system in which the fault is indicated.

DISCUSSION POINT	RELATED INSTRUCTOR ACTIVITY
9. GWS adjustment, and calibration procedures.	9. Alignment procedures for the OSS are located in SW210-A1-MMO-010. Alignment procedures for the Gun Mount MK 45 MOD 4 are located in SW323-F4-MMO-010. GCS alignment procedures are located in SW224-A8-MMO-010.
10. Review and Summary	
11. Assignment	11. Make study assignments if required.

LESSON PLAN

1. THEORY OF THE GUN WEAPON SYSTEM (GWS) MK 34 — A-113-0125
2. OPERATIONAL DESCRIPTION OF THE GUN WEAPON SYSTEM (GWS) MK 34

LAB PERIODS: 0
CLASS PERIODS: 1

Topic Learning Objectives

Upon successful completion of this topic, the trainee will be able to:

1. Describe the personnel and equipment safety precautions that are to be observed during operation of the Gun Weapon System (GWS) MK 34 to the detail required to support casualty/degraded/abnormal/not-full-mission capable modes of operation.

2. Describe the Gun Weapon System (GWS) MK 34 casualty, degraded, and abnormal mode/s of operation to the detail required to support casualty/degraded/abnormal/not-full-mission capable modes of operation.

Trainee Preparation

A. Trainee Support Materials:
   1. None

B. Reference Publications:
   1. None

Instructor Preparation

A. Review Assigned Trainee Material.

B. Reference Publications:
   1. SW221-A1-MMO-010

C. Training Materials Required:
   1. None

LESSON PLAN

1. THEORY OF THE GUN WEAPON SYSTEM (GWS) MK 34 A-113-0125
2. OPERATIONAL DESCRIPTION OF THE GUN WEAPON SYSTEM (GWS) MK 34

DISCUSSION POINT	RELATED INSTRUCTOR ACTIVITY
1. Personnel and equipment safety precautions.	1. Reference SW221–A1–MMO–010 Safety Summary.
2. GWS casualty, degraded, and abnormal modes.	2. Reference SW221–A1–MMO–010 Paragraph 3-5.
3. Review and Summary	
4. Assignment	4. Make study assignments if required.

Section 2: OPERATION OF THE GUN WEAPON SYSTEM (GWS) MK 34

Topic No.	Topic Title	Page
1	Basic Operation of the Gun Weapon System (GWS) MK 34	S1273/2-2-1-1

2. OPERATION OF THE GUN WEAPON SYSTEM (GWS) MK 34 A-113-0125

1. BASIC OPERATION OF THE GUN WEAPON SYSTEM (GWS) MK 34

LAB PERIODS: 4
CLASS PERIODS: 0

Topic Learning Objectives

Upon successful completion of this topic, the trainee will be able to:

1. Adhere to personnel and equipment safety precautions during operation of the Gun Weapon System (GWS) MK 34 in accordance with casualty/degraded/abnormal/not-full-mission operational procedures.

2. Perform the Gun Weapon System (GWS) MK 34 casualty, degraded, and abnormal mode/s of operation in accordance with casualty/degraded/abnormal/not-full-mission operational procedures.

Trainee Preparation

A. Trainee Support Materials:
   1. None

B. Reference Publications:
   1. None

Instructor Preparation

A. Review Assigned Trainee Material.

B. Reference Publications:
   1. SW210-A1-MMO-010
   2. SW221-A1-MMO-010
   3. SW224-A8-MMO-010

C. Training Materials Required:
   1. Trainee Guide
   2. References:
      a. SW210-A1-MMO-010
      b. SW221-A1-MMO-010
      c. SW224-A8-MMO-010
   3. Equipment:
      a. Equipment listed in Job Sheet S1273/2–2–1–1

DISCUSSION POINT	RELATED INSTRUCTOR ACTIVITY
1. Safety	1. Reference SW221–A1–MMO–010 Safety Summary.
2. Personnel and equipment safety precautions.	2. Review Training Time Out (TTO) and all lab safety procedures.
3. GWS casualty, degraded, and abnormal modes.	3. Direct trainee to perform Job Sheet S1273/2–2–1–1.
4. Critique	
5. Assignment	5. Make study assignments if required.

PART S1273/3

GUN WEAPON SYSTEM (GWS) MK 34

Section 1. PREVENTIVE MAINTENANCE OF THE GUN WEAPON SYSTEM (GWS) MK 34 (P1)

-113-0125

ERIODS: 2
ERIODS: 0

Section 1: PREVENTIVE MAINTENANCE OF THE GUN WEAPON SYSTEM (GWS) MK 34

Topic No.	Topic Title	Page
1	Preventive Maintenance of the Gun Weapon System (GWS) MK 34	S1273/3-1-1-1

FOR TRAINING USE ONLY

RESOURCE REQUIREMENTS LIST

COURSE: Gun Computer System (GCS) MK 160 MOD 8/Optical Sight System (OSS) MK 46 MOD 1 Differences Course

A. Texts

Doc. No.	Title	Per Tr.	Per Inst.	Per Cl.
A-113-0125	Gun Computer System (GCS) MK 160 MOD 8/Optical Sight System (OSS) MK 46 MOD 1 Differences Course Lesson Plan. Prepared by PEO IWS3C.		1	
A-113-0125	Gun Computer System (GCS) MK 160 MOD 8/Optical Sight System (OSS) MK 46 MOD 1 Differences Course Trainee Guide. Prepared by PEO IWS3C.	1	1	

B. References

Doc. No.	Title	Per Tr.	Per Inst.	Per Cl.
MIP 4801/006 OPNAVINST 4790 (Series)	Preventive Maintenance Requirements for Gun Weapon System (GWS) MK 34 MOD 0 & 1	1	1	1
MIP 4813/007 OPNAVINST 4790 (Series)	Preventive Maintenance for Optical Sight System (OSS) MK 46 MOD 0 & 1	1	1	1
MIP 4813/008 OPNAVINST 4790 (Series)	Preventive Maintenance for Gun Computer System (GCS) MK 160 (MOD)	1	1	1
OPNAVINST 5510.10 (Series)	Information and Personnel Security Program Regulation	1	1	1
SE610-PV-MMO-010	Organizational Level Maintenance for Data Processing Set (DPS) AN/UYK-44(V)	1	1	1
SE610-PV-SUP-030	Technical Manual Supplement for Data Processing Set (DPS) AN/UYK-44(V)	1	1	1
SE685-CA-MMO-05A	Maintenance Manual for Command and Decision Console OJ-719(V)9/AN/UYQ-70(V)	1	1	1

RESOURCE REQUIREMENTS LIST - Continued.

Doc. No.	Title	Per Tr.	Per Inst.	Per Cl.
SE686-CA-MMO-050	Maintenance Manual for Command and Decision Console OJ-719(V)/UYQ-70(V)	1	1	1
SW210-A1-MMO-010	Technical Manual Optical Sight System MK 46 MOD 1	1	1	1
SW210-A1-MMO-020	Technical Manual Optical Sight System MK 46 MOD 1	1	1	1
SW221-A1-MMO-010	Maintenance Manual for Gun Weapon System MK 34 MOD 1	1	1	1
SW224-A8-MMO-010	Maintenance Manual for Gun Computer System MK 160 MOD 8	1	1	1
SW224-AA-MMO-A10	Technical Manual for Recorder Reproducer MK 27 MOD 1	1	1	1

C. Equipment

Item No.	Nomenclature	Part No.	Unit Cost	CAGE	Tech. Ref.	Per Tr.	Per Inst.	Per Cl.
1.	Command and Decision Console OJ-719(V)/UYQ-70(V) (p/o GCS MK 160 MOD 8)	7244436	$275,000 .00		SE686-CA-MMO-050			1
2.	Control and Display Console (CDC) MK 132 MOD 2 (p/o OSS MK 46 MOD 1)	006040525			SW210-A1-MMO-010/020			1
3.	Gun Computer System (GCS) MK 160 MOD 8	No Number			SW224-A8-MMO-010			1

RESOURCE REQUIREMENTS LIST - Continued.

Item No.	Nomenclature	Part No.	Unit Cost	CAGE	Tech. Ref.	Per Tr.	Per Inst.	Per Cl.
4.	Gun Console Computer (GCC) AN/UYK-44(V) (EP/OSM) with Expansion Adapter Group (EAG) OF-174(V) (p/o GCS MK 160 MOD 8)	7221614-01	$495,000.00		SW224-A8-MMO-010, SE610-PV-MMO-010, SE610-PV-SUP-030			1
5.	Gun Mount Control Panel (GMCP) MK 437 MOD 1	7244531	$70,000.00		SW224-A8-MMO-010			1
6.	Gun Mount Processor (GMP) AN/UYK-44(V) (EP/OSM) (P/o GCS MK 160 MOD 8	7221614-01	$335,000.00		SW224-A8-MMO-010			1
7.	Optical Sight System (OSS) MK 46 MOD 1	0-006040005	$1,700,000.00		SW210-A1-MMO-010/020			1
8.	Recorder Reproducer (RCRP) MK 27 MOD 1 (p/o GCS MK 160 MOD 8)	7244867-1	$120,000.00		SW224-AA-MMO-010			1

D. Films/Videotapes/Videodiscs

Designator	Title	Running Time	Per Cl.
None			

RESOURCE REQUIREMENTS LIST - Continued.

E. Graphics

1. Transparencies

Transparency No.	Title	Per Cl.	Source	Figure No.
None				

2. Slides.

Slide No.	Title	Per Cl.	Source	Figure No.
None				

3. Wall Charts.

Wall Chart No.	Title	Per Cl.	Source	Figure No.
None				

F. Hand Tools

Item No.	Nomenclature	Part No.	Unit Cost	CAGE	Tech. Ref.	Per Tr.	Per Inst.	Per Cl.
1.	General Purpose Hand Tools	N/A	$150.00		N/A	1	1	1

G. Prefaulted Modules

Item No.	Nomenclature	Part No.	Unit Cost	CAGE	Tech. Ref.	Per Tr.	Per Inst.	Per Cl.
1.	S1277 #1 (GMCP) Failed Power Supply, Gun Mount Control Panel (GMCP) MK 437 MOD 1	20010006-015			SW224-A8-MMO-010	1	1	1
2.	S1277 #2 (GMCP) Failed Velocimeter Faile-Safe CCA	7625460	$2,000.00		SW224-A8-MMO-010	1	1	1

RESOURCE REQUIREMENTS LIST - Continued.

Item No.	Nomenclature	Part No.	Unit Cost	CAGE	Tech. Ref.	Per Tr.	Per Inst.	Per Cl.
3.	S1277 #3 (GMCP) Failed Indicating Fuze Holder	FHL32W-11	$80.00		SW224-A8-MMO-010	1	1	1

H. Support Equipment

Item No.	Nomenclature	Part No.	Unit Cost	CAGE	Tech. Ref.	Per Tr.	Per Inst.	Per Cl.
1.	AEGIS Display System (ADS) Emulator (Briggs Box)	N/A	$72,000.00		None	1	1	1
2.	Gun Computer System Training Facility AN/UYK-44 (V) EP/OSM	7221614-01	$335,000.00		SE610-PV-MMO-010, SE610-PV-SUP-030	1	1	1
3.	Gun Mount Interface Tester (GMIT) Desktop Computer	N/A	$10,000.00		N/A	1	1	1
4.	Vacuum Cleaner, General Purpose	N/A	$100.00		None	1	1	1

I. Test Equipment

Item No.	Nomenclature	Part No.	Unit Cost	CAGE	Tech. Ref.	Per Tr.	Per Inst.	Per Cl.
1.	Multimeter, Electronic, Digital, Fluke Corporation		$240.00		N/A	1	1	1

RESOURCE REQUIREMENTS LIST - Continued.

J. Support Materials

Instruction Sheets. All instruction sheets (i.e., Assignment Sheets, Job Sheets, etc.) are A-113-0125 series.

Identification No.	Instruction Sheet Type	Title	Per Tr.	Per Inst.	Per Cl.

(All instruction sheets for this course are contained within Trainee Guide A-113-0125.)

PROFILE ITEM-TO-TOPIC OBJECTIVE ASSIGNMENT CHART

Table	Item	TOS	Vol	Part	Sect	Topic	TLO	Test Item No.
S1273	1-1-1	T1		S1273/1	1	1	1	
S1273	1-1-2	T1		S1273/1	1	1	5	
S1273	1-1-2-a	T1		S1273/1	1	1	5	
S1273	1-1-2-b	T1		S1273/1	1	1	5	
S1273	1-1-2-c	T1		S1273/1	1	1	5	
S1273	1-1-3	T1		S1273/1	1	1	4	
S1273	1-1-4	T1		S1273/1	1	1	7	
S1273	1-1-5	T1		S1273/1	1	1	2	
S1273	1-1-6	T1		S1273/1	1	1	9	
S1273	1-2-1	T1		S1273/1	1	1	6	
S1273	1-2-2	T1		S1273/1	1	1	8	
S1273	1-3-1	T1		S1273/1	1	2	3	
S1273	1-3-2	T1		S1273/1	1	2	4	
S1273	1-4-1	T1		S1273/1	1	2	1	
S1273	1-4-2	T1		S1273/1	1	2	2	
S1273	1-4-2-a	T1		S1273/1	1	2	2	
S1273	1-4-2-b	T1		S1273/1	1	2	2	
S1273	1-5-1	T1		S1273/1	1	3	2	
S1273	1-5-2	T1		S1273/1	1	3	3	
S1273	1-5-2-a	T1		S1273/1	1	3	3	
S1273	1-5-2-b	T1		S1273/1	1	3	3	
S1273	1-5-2-c	T1		S1273/1	1	3	3	
S1273	1-5-3	T1		S1273/1	1	3	4	
S1273	1-5-4	T2		S1273/2	1	2	2	
S1273	1-5-5	T1		S1273/1	1	3	5	
S1273	1-5-6	T1		S1273/1	1	3	1	
S1273	1-5-6	T2		S1273/2	1	2	1	
S1273	1-6-1	T2		S1273/2	1	1	2	
S1273	1-6-1-a	T2		S1273/2	1	1	2	

Table	Item	TOS	Vol	Part	Sect	Topic	TLO	Test Item No.
S1273	1-6-1-b	T2		S1273/2	1	1	2	
S1273	1-6-2	T2		S1273/2	1	1	3	
S1273	1-6-3	T2		S1273/2	1	1	4	
S1273	1-6-4	T2		S1273/2	1	1	5	
S1273	1-6-5	T2		S1273/2	1	1	6	
S1273	1-6-6	T2		S1273/2	1	1	7	
S1273	1-6-7	T2		S1273/2	1	1	8	
S1273	1-6-8	T2		S1273/2	1	1	9	
S1273	1-6-9	T2		S1273/2	1	1	1	
S1273	1-7-1	T1		S1273/1	1	1	3	
S1273	1-7-1-a	T1		S1273/1	1	1	3	
S1273	1-7-1-b	T1		S1273/1	1	1	3	
S1273	1-7-1-c	T1		S1273/1	1	1	3	
S1273	1-7-1-d	T1		S1273/1	1	1	3	
S1273	2-1-1	O1		S1273/1	2	1	2	
S1273	2-1-1-a	O1		S1273/1	2	1	2	
S1273	2-1-1-b	O1		S1273/1	2	1	2	
S1273	2-1-1-c	O1		S1273/1	2	1	2	
S1273	2-1-2	O1		S1273/1	2	1	3	
S1273	2-1-3	O2		S1273/2	2	1	2	
S1273	2-1-4	O1		S1273/1	2	1	4	
S1273	2-1-5	O1		S1273/1	2	1	1	
S1273	2-1-5	O2		S1273/2	2	1	1	
S1273	2-2-1	P1		S1273/3	1	1	2	
S1273	2-2-2	C1		S1273/4	1	1	2	
S1273	2-2-3	C1		S1273/4	1	1	3	
S1273	2-2-4	C1		S1273/4	1	1	4	
S1273	2-2-5	C1		S1273/4	1	1	5	
S1273	2-2-6	C1		S1273/4	1	1	6	

PROFILE ITEM-TO-TOPIC OBJECTIVE ASSIGNMENT CHART - Continued.

Table	Item	TOS	Vol	Part	Sect	Topic	TLO	Test Item No.
S1273	2-2-7	C1		S1273/4	1	1	7	
S1273	2-2-8	P1		S1273/3	1	1	1	
S1273	2-2-8	C1		S1273/4	1	1	1	
S1274	1-1-1	T1		S1274/1	1	1	1	
S1274	1-1-2	T1		S1274/1	1	1	5	
S1274	1-1-2-a	T1		S1274/1	1	1	5	
S1274	1-1-2-b	T1		S1274/1	1	1	5	
S1274	1-1-2-c	T1		S1274/1	1	1	5	
S1274	1-1-2-e	T1		S1274/1	1	1	5	
S1274	1-1-2-f	T1		S1274/1	1	1	5	
S1274	1-1-2-g	T1		S1274/1	1	1	5	
S1274	1-1-3	T1		S1274/1	1	1	4	
S1274	1-1-4	T1		S1274/1	1	1	7	
S1274	1-1-5	T1		S1274/1	1	1	2	
S1274	1-1-6	T1		S1274/1	1	1	9	
S1274	1-2-1	T1		S1274/1	1	1	6	
S1274	1-2-1-a	T1		S1274/1	1	1	6	
S1274	1-2-1-b	T1		S1274/1	1	1	6	
S1274	1-2-1-c	T1		S1274/1	1	1	6	
S1274	1-2-1-e	T1		S1274/1	1	1	6	
S1274	1-2-1-f	T1		S1274/1	1	1	6	
S1274	1-2-1-g	T1		S1274/1	1	1	6	
S1274	1-2-2	T1		S1274/1	1	1	8	
S1274	1-3-1	T1		S1274/1	1	2	3	
S1274	1-3-2	T1		S1274/1	1	2	4	
S1274	1-4-1	T1		S1274/1	1	2	1	
S1274	1-4-2	T1		S1274/1	1	2	2	
S1274	1-4-2-a	T1		S1274/1	1	2	2	
S1274	1-4-2-b	T1		S1274/1	1	2	2	

Table	Item	TOS	Vol	Part	Sect	Topic	TLO	Test Item No.
S1274	1-5-1	T1		S1274/2	1	1	2	
S1274	1-5-2	T1		S1274/2	1	1	3	
S1274	1-5-2-a	T1		S1274/2	1	1	3	
S1274	1-5-2-b	T1		S1274/2	1	1	3	
S1274	1-5-2-c	T1		S1274/2	1	1	3	
S1274	1-5-3	T1		S1274/2	1	1	4	
S1274	1-5-4	T2		S1274/2	2	1	4	
S1274	1-5-5	T1		S1274/2	1	1	5	
S1274	1-5-6	T1		S1274/2	1	1	1	
S1274	1-5-6	T2		S1274/2	2	1	1	
S1274	1-6-1	T2		S1274/2	2	2	2	
S1274	1-6-1-a	T2		S1274/2	2	2	2	
S1274	1-6-1-b	T2		S1274/2	2	2	2	
S1274	1-6-2	T2		S1274/2	2	2	3	
S1274	1-6-3	T2		S1274/2	2	2	4	
S1274	1-6-4	T2		S1274/2	2	2	5	
S1274	1-6-5	T2		S1274/2	2	2	6	
S1274	1-6-6	T2		S1274/2	2	2	7	
S1274	1-6-7	T2		S1274/2	2	2	8	
S1274	1-6-8	T2		S1274/2	2	2	9	
S1274	1-6-9	T2		S1274/2	2	2	1	
S1274	1-7-1	T1		S1274/1	1	1	3	
S1274	1-7-1-c	T1		S1274/1	1	1	3	
S1274	2-1-1	O1		S1274/2	2	1	3	
S1274	2-1-1-a	O1		S1274/2	2	1	3	
S1274	2-1-1-b	O1		S1274/2	2	1	3	
S1274	2-1-1-c	O1		S1274/2	2	1	3	
S1274	2-1-2	O1		S1274/2	2	1	5	
S1274	2-1-3	O2		S1274/2	3	1	2	

FAULT APPLICABILITY LIST

PART	SECT	TOS	EQUIPMENT	FUNCTION FAULTED	FAULT NO.	DOCUMENT
S4292/2	2	P1 / C1	Gun Console Computer (GCC) AN/UYK-44(V) (EP/OSM) with Expansion Adapter Group (EAG) OF-174(V) (p/o GCS MK 160 MOD 8)	Inoperative Clock	S4292/2-2-2-1	SE610-PV-MMO-010
S1274/3	1	C1	Gun Computer System (GCS) MK 160 MOD 8	Power Supply Failure	S1274/3-1-2-1*	MIP 4801/006 OPNAVINST 4790 (Series)

Note 1: The PART and SECT columns indicate the most appropriate location within the curriculum to use the fault.

Note 2: The asterisk in the Fault No. column indicates that fault is required for use in the curriculum.

Note 3: Faults approved for dual use are noted in the TOS column.

TAB A-6

TRAINEE GUIDE

INSTRUCTOR CHECK _____ SAT

Step 3. Return the equipment to its original operating condition.

INSTRUCTOR CHECK _____ SAT

TRIDENT Exterior Communications System (ECS) Control, Monitor, and Test Subsystem (CMT) Subsystem

TRAINEE GUIDE

August 1990

TRAINEE NAME PAGE

TRAINEE GUIDE

NAME _____

CLASS NUMBER _____

LIST OF EFFECTIVE ELEMENTS

Element No.	Change In Effect	Element No.	Change In Effect
Title Page	Original	F0147-7-1-2	Original
Trainee Name Page	Original		
List of Effective Elements	Original		
Letter of Promulgation	Original		
Change Record	Original		
Safety/Hazard Awareness Notice	Original		
Security Awareness Notice	Original		
Table of Contents	Original		
How to Use Your Trainee Guide	Original		
Course Learning Objectives	Original		
Course Master Schedule	Original		
F0147-1-1-1	Original		
F0147-1-2-1	Original		
F0147-1-2-2	Original		
F0147-5-3-1	Original		
F0147-7-1-1	Original		

LETTER OF PROMULGATION

CHANGE RECORD

Number and Description of Change	Entered By	Date

SAFETY/HAZARD AWARENESS NOTICE

All personnel involved in operation or maintenance of electronic equipment must be thoroughly familiar with the electronic equipment safety precautions contained in Electronic Installation and Maintenance Book, General, NAVSEA SE000-00-EIM-100, Section 3, and Naval Ships' Technical Manual, Chapter 300, S9086-KC-STM-010/CH-300, Section 2. In addition, attention is directed to the Navy Safety Program Instructions, OPNAVINST 5100.19 (series) and 5100.23 (series), and the safety training requirements contained in NPDCINST 5100.1 (series).

This equipment employs voltages, which are dangerous and may be fatal if contacted by operating or maintenance personnel. There are mechanical safety devices associated with this equipment that must be maintained in a constant state of readiness to preclude causing injury to personnel and/or damage to equipment. Extreme caution must be exercised when working with or handling this equipment. Some components are extremely heavy. Rigid pre-inspections must be made to handling equipment to ensure their safety and safety summaries must be read to the handling teams prior to conducting dangerous evolutions. Hazard awareness dictates that this equipment must always be viewed as an integral part of a system and not as a component. While every practical precaution has been incorporated into this equipment, it is not possible or practical to try to list every condition or hazard that you may encounter. Therefore, all operating or maintenance personnel must at all times observe as a minimum, the following:

DON'T SERVICE OR ADJUST ALONE

Under no circumstances will a person operate or maintain equipment without the immediate presence or assistance of another person capable of rendering aid. Unless under direct supervision of a qualified person, no person shall operate or maintain equipment for which he is unqualified.

DON'T TAMPER WITH INTERLOCKS

Reliance on interlock circuits to remove power from the equipment is never to be assumed. Until operation of the interlock is verified, equipment is assumed to be in the hazardous mode of operation. Under no circumstances will any access gate, door, or interlock switch be removed, bypassed, or modified in any way by other than authorized maintenance personnel and then only after observing proper tag-out procedures.

REPORT ALL HAZARDS

If at any time you detect a hazard, it is your responsibility to report the hazard to ensure that it is corrected. If at any time you detect a "new" or "suspected new" hazard, particularly due to equipment installation, modification, or repair, it is your responsibility to ensure that a SAFETYGRAM is submitted to the Naval Safety Center, Norfolk, VA, in accordance with OPNAVINST 5102.1 (series). This will ensure that this hazard will be investigated, publicized, or corrected, as required.

SAFETY/HAZARD AWARENESS NOTICE - Continued

Additionally, SSPINST 3100.1 (series) requires SWS personnel to submit special check TFRs when a potential or actual unsafe condition is noticed that could cause injury to personnel and/or damage to equipment. When a problem/failure occurs involving the safety of personnel or equipment and it cannot be immediately resolved by command/technical assistance on-site, the TFR data shall be transmitted to SSP and others by Naval Message.

SAFETY - "TRAINING TIME OUT"

In any training situation when a student or instructor expresses concern for personal safety, it is an indication that a need for clarification of procedures or requirements exists and a "Training Time Out" shall be called. An individual should verbally call "TRAINING TIME OUT" (TTO) if they detect a hazardous condition during any teaching session (lab or theory), or raise a clenched fist to indicate a "TRAINING TIME OUT" (TTO) if the verbal command cannot be heard. Training activities will be suspended until the hazardous situation has been examined and additional explanation and instruction has been provided to allow safe resumption of training. Caution should be used to ensure a halt to a procedure does not result in additional hazards. TTO follow-up procedures will be performed in accordance with CNPDCINST 5100.1 (Series).

PRE-MISHAP PLAN

The Pre-Mishap plan explains the procedures to follow and essential telephone numbers to call in case of an accident or emergency. It is located by the emergency exit in the laboratory.

SECURITY AWARENESS NOTICE

In the Event that classified information is added to this document as a result of instructor personalization, the document shall be marked and handled in accordance with the regulations of the latest edition of the Departmen of the Navy Supplement to the DoD Information Security Program Regulation OPNAVINST 5510.1

TABLE OF CONTENTS

Part Page

FRONT MATTER
Title Page i
Trainee Name Page ii
List of Effective Elements iii
Letter of Promulgation iv
Change Record v
Safety/Hazard Awareness Notice vi
Security Awareness Notice viii
Table of Contents ix
How To Use Your Trainee Guide x
Course Learning Objectives xii
Course Master Schedule xiii

Part F0147 - Exterior Communications Subsystem (ECS)

INFORMATION SHEET F0147-1-1-1I Safety Policy for Conducting Training 1
OUTLINE SHEET F0147-1-2-1O General, Physical, Functional, and Interface Description of the AN/BRR-6 2
ASSIGNMENT SHEET F0147-1-2-2A General, Physical, Functional, and Interface Description of the AN/BRR-6 4
PROBLEM SHEET F0147-5-3-1P Power Supply PP-7474/BSC-1 Troubleshooting Documentation 7
DIAGRAM SHEET F0147-7-1-1D 261B Schematic Diagram 9
JOB SHEET F0147-7-1-2J Power Supplies PP-7474/BSC-1 and PP-7475/BSC-1 Adjustment Procedures 10

HOW TO USE YOUR TRAINEE GUIDE

TRAINEE GUIDE

This publication is now in your custody and is for your use while learning theory of operation, adjustment, alignment, and maintenance of <ENTER YOUR OWN DESCRIPTIVE TEXT HERE>.

You may not mark any pages in this book except for Job Sheets, Diagram Sheets, Problem Sheets, and Trainee Name Page.

Upon completion of this course of instruction return this Trainee Guide to your instructor.

OTHER PUBLICATIONS

This publication supersedes NAVEDTRA 34067. Reference publications, OP 3665 series, contain most of the information needed for this equipment but were not prepared for training use.

This Trainee Guide was prepared to guide your training on this equipment and prepare you to use the equipment OPs in maintaining <ENTER YOUR OWN DESCRIPTIVE TEXT HERE>.

Several other pertinent publications will be referred to frequently during the course.

PRESENTATION OF COURSE MATERIAL

The course material on <ENTER YOUR OWN DESCRIPTIVE TEXT HERE> is divided into sections and topics, presented in a logical sequence. Adjustment, alignment, troubleshooting, and efficient use of maintenance aids (OPs and test equipment) is stressed. The knowledge and skills to be acquired are stated for each topic so that you can check your progress.

Assignments in OP 3665 series and other publications are given for study. The effectiveness of this Trainee Guide depends upon the conscientious accomplishment of the reading and study assignments in the reference publications.

WRITTEN AND PERFORMANCE TESTS

A testing program consisting of written and practical performance tests will be administered by the instructor.

SAFETY PRECAUTIONS

Voltages present in <ENTER YOUR OWN DESCRIPTIVE TEXT HERE> are extremely dangerous. Read the Safety Precautions carefully and be aware of dangerous voltages when working on the equipment. Practice safety while learning and while maintaining equipment. Take time to be safe.

SECURITY

HOW TO USE YOUR TRAINEE GUIDE - Continued

In the event that classified information is added to the Trainee Guide as a result of trainee notes, the Trainee Guide shall be marked and handled in accordance with the regulations of the latest edition of the Department of the Navy (DON) Information Security Program (ISP) Regulation (SECNAV M-5510.36).

COURSE LEARNING OBJECTIVES

Upon successful completion of this course, the trainee will have acquired the following knowledge and skills and will be able to:

KNOWLEDGE:

1. State the purpose, function and location, and describe the documentation of the Trident Exterior Communications System (ECS)

2. Describe the theory and associated documentation necessary to support and understand the performance of casualty/degraded/abnormal operational tasks and operational tasks requiring advanced analysis, all routine preventive maintenance, and documented fault isolation and repair without going into detailed logic, circuit analysis, individual program flow diagrams, or detailed mechanical component breakdown of the
   a. Data Switching Subsystem
   b. Trident Exterior Communications System (ECS) Support System Power Distribution Group
   c. Towed Buoy Antenna AN/BRR-6

3. Describe the theory and associated documentation necessary to support all corrective maintenance without going into signal or electrical flow, computer instructions, or detailed mechanical component breakdown except for those mechanical or logic elements or circuits unique to the equipment or program of the Trident Exterior Communications System (ECS)

SKILL:

1. Perform normal operational procedures with supervision on the
   a. Trident Exterior Communications System (ECS) Support System Power Distribution Group
   b. Towed Buoy Antenna AN/BRR-6

2. Perform all operational procedures with supervision on the
   a. Trident Exterior Communications System (ECS)
   b. Data Switching Subsystem

3. Perform preventive maintenance procedures with supervision on the
   a. Trident Exterior Communications System (ECS)
   b. Data Switching Subsystem
   c. Trident Exterior Communications System (ECS) Support System Power Distribution Group
   d. Towed Buoy Antenna AN/BRR-6

4. Perform documented fault isolation and repair procedures to the authorized maintenance level, with supervision, on the Trident Exterior Communications System (ECS)

COURSE MASTER SCHEDULE

A-111-4251
Length of period : 50 minutes

WEEK 1
Day 1

Topic No.	Type	Period	Topic Title	Ratio	BottleNeck Ratio
	Specia l	1	Introduction to Course and Training Facility	12:1	
F0147-1-1	Class	2	General & Physical Physical Description of the Trident Exterior Communications System (ECS)	12:1	
F0147-1-2	Class	3	Functional & Interface Description of the Trident Exterior Communications System (ECS)	12:1	
F0147-2-1	Class	4	Operational Description of the Trident Exterior Communications System (ECS)	12:1	
F0147-2-2	Lab	5	Basic Operation of the Trident Exterior Communications System (ECS)	12:1	6/2
F0147-2-2	Lab	6	Basic Operation of the Trident Exterior Communications System (ECS)	12:1	6/2
F0147-3-1	Class	7	General & Physical Description of the Trident Exterior Communications System (ECS)	12:1	
F0147-3-2	Class	8	Functional & Interface Description of the Trident Exterior Communications System (ECS)	12:1	
Day 2					
F0147-4-1	Class	9	Operational Description of the Trident Exterior Communications System (ECS)	12:1	
F0147-4-2	Lab	10	Operation of the Trident Exterior Communications System (ECS)	12:1	6/2
F0147-4-2	Lab	11	Operation of the Trident Exterior Communications System (ECS)	12:1	6/2
F0147-5-1	Class	12	Maintenance Description of the Trident Exterior Communications System (ECS)	12:1	
F0147-5-2	Lab	13	Preventive Maintenance of the Trident Exterior Communications System (ECS)	12:1	6/2
F0147-5-2	Lab	14	Preventive Maintenance of the Trident Exterior Communications System (ECS)	12:1	6/2
F0147-5-3	Lab	15	Basic Corrective Maintenance of the Trident Exterior Communications System	12:1	6/2

COURSE MASTER SCHEDULE - Continued

			(ECS)		
F0147-5-3	Lab	16	Basic Corrective Maintenance of the Trident Exterior Communications System (ECS)	12:1	6/2
Day 3					
F0147-6-1	Class	17	Maintenance Description of the Trident Exterior Communications System (ECS)	12:1	
F0147-7-1	Class	18	General, Physical, Functional Interface & Documentation, Description of the Trident Exterior Communications System (ECS) Support System Power Distribution Group	12:1	
F0147-8-1	Class	19	Operational Description of the Trident Exterior Communications System (ECS) Support System Power Distribution Group	12:1	
F0147-8-2	Lab	20	Basic Operation of the Trident Exterior Communications System (ECS) Support System Power Distribution Group	12:1	6/2
F0147-8-2	Lab	21	Basic Operation of the Trident Exterior Communications System (ECS) Support System Power Distribution Group	12:1	6/2
F0147-9-1	Class	22	Maintenance Description of the Trident Exterior Communications System (ECS) Support System Power Distribution Group	12:1	
F0147-9-2	Lab	23	Preventive Maintenance of the Trident Exterior Communications System (ECS) Support System Power Distribution Group	12:1	6/2
F0147-9-2	Lab	24	Preventive Maintenance of the Trident Exterior Communications System (ECS) Support System Power Distribution Group	12:1	6/2
Day 4					
F0147-10-1	Class	25	General, Physical, Functional, Interface & Documentation Description of the Data Switching Subsystem	12:1	
F0147-11-1	Class	26	Operational Description of the Data Switching Subsystem	12:1	
F0147-11-2	Lab	27	Basic Operation of the Data Switching Subsystem	12:1	6/2
F0147-11-2	Lab	28	Basic Operation of the Data Switching Subsystem	12:1	6/2
F0147-12-1	Class	29	General , Physical, Functional & Interface Description of the Data Switching Subsystem	12:1	

COURSE MASTER SCHEDULE - Continued

F0147-13-1	Class	30	Operational Description of the Data Switching Subsystem	12:1	
F0147-13-2	Lab	31	Operation of the Data Switching Subsystem	12:1	6/2
F0147-13-2	Lab	32	Operation of the Data Switching Subsystem	12:1	6/2
Day 5					
F0147-14-1	Class	33	Maintenance Description of the Data Switching Subsystem	12:1	
F0147-14-2	Lab	34	Preventive Maintenance of the Data Switching Subsystem	12:1	6/2
F0147-14-2	Lab	35	Preventive Maintenance of the Data Switching Subsystem	12:1	6/2
F0147-15-1	Class	36	General, Physical, Functional Interface & Documentation, Description of the Towed Buoy Antenna AN/BRR-6	12:1	
F0147-16-1	Class	37	Operational Description of the Towed Buoy Antenna AN/BRR-6	12:1	
F0147-16-2	Lab	38	Basic Operation of the Towed Buoy Antenna AN/BRR-6	12:1	6/2
F0147-16-2	Lab	39	Basic Operation of the Towed Buoy Antenna AN/BRR-6	12:1	6/2
	Specia l	40	Performance Test (P-8)	12:1	6/2
WEEK 2					
Day 1					
Topic No.	Type	Period	Topic Title	Ratio	BottleNeck Ratio
F0147-17-1	Class	41	General, Physical, Functional ,& Interface Description of the Towed Buoy Antenna AN/BRR-6	12:1	
F0147-17-2	Class	42	Operational Description of the Towed Buoy Antenna AN/BRR-6	12:1	
F0147-18-1	Class	43	Maintenance Description of the Towed Buoy Antenna AN/BRR-6	12:1	
	Specia l	44	Knowledge Test (K-11)	12:1	
F0147-18-2	Lab	45	Preventive Maintenance of the Towed Buoy Antenna AN/BRR-6	12:1	6/2
F0147-18-2	Lab	46	Preventive Maintenance of the Towed Buoy Antenna AN/BRR-6	12:1	6/2
	Specia	47	Course Summary and Review	12:1	

COURSE MASTER SCHEDULE - Continued

	1				
	Special	48	Course Summary and Review	12:1	
Day 2					
	Special	49	Comprehensive Test	12:1	
	Special	50	Comprehensive Test	12:1	
	Special	51	Performance Test	12:1	3/2
	Special	52	Performance Test	12:1	3/2
	Special	53	Performance Test	12:1	3/2
	Special	54	Performance Test	12:1	3/2
	Special	55	Graduation	12:1	

INFORMATION SHEET F0147-1-1-1

SAFETY POLICY FOR CONDUCTING TRAINING

A. INTRODUCTION

1. This information sheet is designed to provide you with an understanding of Navy policy regarding training safety.

2. This information sheet covers "Training Time Out" procedures that are to be used during the conduct of this course.

B. REFERENCES

1. CNETINST 1500.20 (Series), Safety Policy and Procedures for Conducting Training

C. INFORMATION

1. The mission of the Navy dictates the need for an aggressive training program to prepare personnel to perform professionally and competently in many high risk activities under diverse and possible adverse conditions. Potentially high risk training includes, but is not limited to, training requiring exposure to potentially hazardous conditions involving the environment (water entry, temperature extremes), atmosphere (fire fighting, use of solvents), explosives (weapons), electrical mechanical or hydraulic training devices or equipments.

2. It is the policy of the Chief of Naval Education and Training (CNET) to provide required training under controlled conditions, within practical and realistic limits, to obtain desired training outcomes while maintaining the maximum margin of safety. Included in this policy is the requirement that in the event a trainee is apprehensive of his personal safety while undergoing training, that concern shall be addressed.

3. TRAINING TIME OUT (TTO)

1. Any time a trainee or Instructor has apprehension concerning his personal safety or that of another, he shall verbally signal "TRAINING TIME OUT" to stop the exercise and receive or provide additional instruction as appropriate in accordance with CNETINST 1500.20 series.

OUTLINE SHEET F0147-1-2-1

GENERAL, PHYSICAL, FUNCTIONAL, AND INTERFACE DESCRIPTION OF THE AN/BRR-6

A. INTRODUCTION

This lesson will show how the AN/BRR-6 operates and its effect on the system as a whole.

B. TOPIC LEARNING OBJECTIVES

Upon successful completion of this topic, you will be able to:

1. Describe how the ECS works (functional operation). Include types of signals, signal flow, modes, inputs and outputs, sequence of events, and protective devices to support normal operation.
2. Describe the functions of each control and indicator in each position, condition, and color to support normal operation.
3. Describe each program, subprogram, and routine used with the ECS. Include name, program number, and assumptions and constraints imposed to support normal operation.
   a. CP
   b. MP
   c. VLF
   d. On-line test
   e. Off-line utility package
4. Describe the functional interface between the ECS and related external equipment to support normal operation.
   a. Power sources
   b. Input signals
   c. Output signals
   d. Control signals

C. Topic Outline

1. ECS functional operation.

2. Functions of each control

   a. Position

   b. Condition

   c. Color

3. Functions of each indicator in each.

   d. Position

   e. Condition

   f. Color

4. Program, subprogram, and routine used with the ECS.

   a. CP

   b. MP

   c. VLF

   d. On-line test

   e. Off-line utility package

5. Functional interface

   a. Power sources

   b. Input signals

   c. Output signals

   d. Control signals

ASSIGNMENT SHEET F0147-1-2-2

GENERAL, PHYSICAL, FUNCTIONAL, AND INTERFACE DESCRIPTION OF THE AN/BRR-6

A. INTRODUCTION

This lesson will show how the AN/BRR-6 operated and its effect on the system as a whole.

B. TOPIC LEARNING OBJECTIVES

Upon successful completion of this topic, you will be able to:

1. Describe how the ECS works (functional operation). Include types of signals, signal flow, modes, inputs and outputs, sequence of events, and protective devices to support normal operation.
2. Describe the functions of each control and indicator in each position, condition, and color to support normal operation.
3. Describe each program, subprogram, and routine used with the ECS. Include name, program number, and assumptions and constraints imposed to support normal operation.
   a. CP
   b. MP
   c. VLF
   d. On-line test
   e. Off-line utility package
4. Describe the functional interface between the ECS and related external equipment to support normal operation.
   a. Power sources
   b. Input signals
   c. Output signals
   d. Control signals

C. STUDY ASSIGNMENT

1. Study EE125-FA-MMF-010/E110-BRR-6, FOMM Technical Manual Support Volume for Radio Receiving Set AN/BRR-6, Volumn 1 glossary; tables 1-1 and 2-1 through 2-7; paragraphs 1-1, 1-2, 1-2.1 through 1-2.12, and 1-3

2. Study NAVSEA S9SSB-X9-SSM-84E/(U)726V6P3B7E-1, Exterior Communications System - Normal Operating Procedures OI 637-11, paragraph 1-1. through 1-6; and figures 2-1 trough 2-8, 51-, and 5-3.

D. STUDY QUESTIONS

1. How may units comprise the BRR-6?

2. What is the frequency range of the BRR-6?

3. What is the maximum speed allowable for towing the buoys?

4. What is the maximum speed for launching a buoy?

5. Is it good practice to stream the buoyant cable and fly a buoy at the same time?

6. How many buoys are associated with each BRR-6?

7. What is the minimum depth for launching a buoy?

8. How much cable does each cable have?

9. What does FOMM mean?

10. Which units of the BRR-6 are located in the IRR?

11. Which units of the BRR-6 are located in the Command and Control Center?

12. How many antennas are associated with the Towed Buoy?

13. What is the purpose of the Depth and Destruct Canister? Where is it located?

14. Which unit controls all the buoy electronics?

15. How close to the surface must the buoy be before Unit 10 can take over depth control?

16. How does Unit 9 (Towed Buoy antenna Control Unit) communicate with the buoy electronics?

17. Where are the tow cable cutters located?

18. Where does the BRR-6 receive its 115 vac 60 Hz power from?

19. Do the navigation center signals go through the AIS cabinet in the IRR?

PROBLEM SHEET F0147-5-3-1

POWER SUPPLY PP-7474/BSC-1 TROUBLESHOOTING DOCUMENTATION

A. INTRODUCTION

This Problem Sheet will help you become proficient at troubleshooting the Power Supply PP-7474/BSC-1 using the authorized technical documentation.

B. EQUIPMENT

None

C. REFERENCES

1. EE109-AL-MMO-010/W153-DSS, Data Switching Subsystem Operation and Maintenance Instructions, Volume 1

D. PROBLEM

Using the authorized technical documentation, list in logical order the troubleshooting steps required to isolate the problem.

D. GIVEN

Each PP-7474/BSC-1 Power Supply malfunction can be identified and isolated using the authorized technical documentation.

E. INITIAL CONDITIONS

An operator of the Data Switching Subsystem reports that the system will power up but will not remain online.

F. REQUIRED RESPONSES

1. Locate the symptom index

_____

2. Locate the symptom

_____

3. Where are the recommended tests and inspections located?

_____

_____

4. Locate the "Troubleshooting and Diagnosing" chapter.

_____

5. Once the problem has been identified, the technical documentation and the steps required to correct the problem.

_____

_____

_____

DIAGRAM SHEET F0147-7-1-1

261B SCHEMATIC DIAGRAM

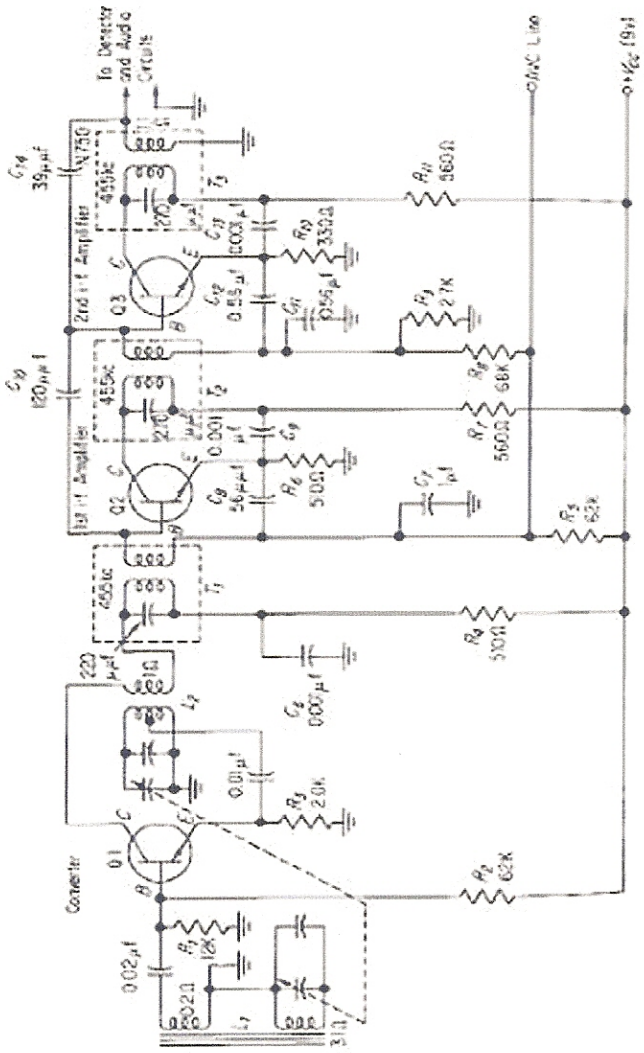

JOB SHEET F0147-7-1-2

POWER SUPPLIES PP-7474/BSC-1 AND PP-7475/BSC-1 ADJUSTMENT PROCEDURES

A. INTRODUCTION

1. This job sheet will aid you in becoming proficient in performing adjustments on the Power Supply PP-7474/BSC-1 to support documented corrective maintenance.

2. You will be evaluated on your observance of safety precautions during performance of this job sheet. In addition, strict adherence to documented procedures will be closely monitored.

B. EQUIPMENT

1. Digital Multimeter, Fluke Model 8600A-01
2. AN/BSC-1 Trainer

C. REFERENCES

1. EE109-AL-MMO-010/W153-DSS, Data Switching Subsystem Operation and Maintenance Instructions, Volume 1

D. SELF-TEST QUESTIONS

E. JOB STEPS

Step 1. Perform the power supply voltage checks as described in paragraphs 6-2.a through 6-2.a(4) and table 6-2. Record your readings in the spaces provided. Inform the instructor of any out of tolerance readings.

PS1: _____ PS2: _____ PS3: _____

INSTRUCTOR CHECK _____ SAT

Step 2. Perform the power supply voltages adjustments as described in paragraphs 6-2.a(5) through 6-2.a12) to correct the power supply(s) which are not within the specified tolerances.

TAB A-7

TEST PACKAGE

TESTING PLAN
FOR
TRIDENT EXTERIOR COMMUNICATIONS SYSTEM (ECS)
MODEL CURRICULA

A-111-4251 REV A

PREPARED BY

TRIDENT TRAINING FACILITY, BANGOR
SILVERDALE, WA 98315-5400

PREPARED FOR

DEPUTY FOR SHORE/TECHNICAL TRAINING (CNET T2)
250 DALLAS STREET
PENSACOLA, FLORIDA 32508-5220

1 MAY 1990

MODEL CURRICULA
TESTS AND METHODS

The purpose of this Testing Plan is to establish procedures that will be used in evaluating the trainee's performance on attaining the objectives of the course. Performance for the A-111-4251 REV A course is measured by the following:

1. Written Progress Test
2. Performance Test
3. Practical Work

- Tests are as follows:

  Written Progress Test: A written test with a minimum of 30 questions is administered at the end of Section 1, Topic 4. The following TLO's must be tested: 1-1-2, 1-1-4, 1-2-2, 1-2-4, 1-2-6, 1-2-8, 1-3-2, 1-3-4, 1-3-5, 1-4-2, and 1-4-3. Additional TLO's may be selected for testing to make up a test with a minimum of 30 questions.

  Performance Test: A skill test is administered at the end of Section 2, Topic 1 utilizing Job Sheet F0/147-2-1-1 and Administrator Guide (minimum score of 70 percent is required).

  Performance Test: A skill test is administered at the end of Section 3, Topic 1 utilizing Job Sheet F0/147-3-1-1 and Administrator Guide (minimum score of 70 percent is required).

  Written Progress Test: A written test with a minimum of 30 questions is administered at the end of Section 4, Topic 5. The following TLO's must be tested: 4-1-2, 4-2-1, 4-2-3, 4-3-2, 4-3-3, 4-3-4, 4-3-5, 4-4-2, 4-5-3, 4-5-4, 4-4-5, 4-4-6, and 4-5-8. Additional TLO's may be selected for testing to make up a test with a minimum of 30 questions.

  Performance Test: A skill test is administered at the end of Section 5, Topic 1 utilizing Job Sheet F0/147-5-1-1 and Administrator Guide (minimum score of 70 percent is required).

TESTS AND METHODS (CONT)

Written Progress Test: A written test with a minimum of 30 questions is administered at the end of Section 6, Topic 3. The following TLO's must be tested: 6-1-2, 6-2-2, 6-3-2, 6-3-3, 6-3-4, 6-3-5, and 6-3-7. Additional TLO's may be selected for testing to make up a test with a minimum of 30 questions.

Performance Test: A skill test is administered at the end of Section 7, Topic 1 utilizing Job Sheet F0/147-7-1-1 and Administrator Guide (minimum score of 70 percent is required).

TESTING CONSTRAINTS

There are no constraints which prevent achievement of all course objectives.

PERFORMANCE TEST PROCEDURES AND NUMERICAL GRADE

Performance tests are administered individually. Performance tests are given to evaluate the trainee's overall skills taught in the course. The instructor/evaluator uses checklists and rating scales to evaluate the trainee. The standard for the performance tests is 70 percent. All critical steps must be performed without error. Trainees will be allowed one retake. Prior to the retake, the instructor will provide specific feedback to the trainee as to his or her performance on the failed test to allow the trainee to correct any problems. Additional practice may be required of the trainee prior to retaking the test. Trainees who are not able to meet the standard after the retest will be recommended for an Academic Review Board. Performance tests will be critiqued.

MINIMUM PASSING GRADE

All tests are criterion-referenced in that they measure the trainees' actual knowledge or performance against criteria derived from learning objectives. The minimum grade for the A-111-4251 REV A course is 70 percent, based on evaluation of the learning objectives and determination that the minimum passing grade needs to be at or above the point of average understanding.

WEIGHTING CRITERIA FOR COMPUTING FINAL COURSE GRADES

Comprehensive Tests 30% X (Trainee's Grades) = _____
Performance Tests 60% X (Trainee's Grades) = _____
Practical Work 10% X (Trainee's Grades) = _____
Total = Final Course Grade:_____

WRITTEN PROGRESS TEST PROCEDURES

Written Progress tests are administered to the entire class. Results of the tests are used to evaluate the trainee's progress in the course. The minimum passing grade is 70 percent.

PRACTICAL WORK GRADES

Practical work grades for the course consist of graded homework and assignment sheets. The practical work grades will be averaged and will count as a percentage of the final grade as indicated on the Weighting Criteria area of this testing plan. If problem areas occur during practical work they will be remediated during class.

REMEDIATION

A trainee who scores at or above the minimum passing score will be immediately remediated in class to their specific problem areas. A trainee who scores below the minimum passing score will be subject to instructor oral remediation and night study. In addition the trainee will be retested as soon as possible. Trainees will be allowed one retake. Trainees who fail the retake will be recommended for an Academic Review Board.

Test to Objective to PPP Line Item Comparison

Part	Section	Lesson Topic	Objective	PPP Table	Test	Number	Version
F0147	1	4.1.4	1	1-6-1a	5020	12	1
F0147	1	4.1.4	2	1-6-3	5020	45	1
F0147	1	4.1.4	3	1-6-11	6112	10	3
F0147	3	4.1.1	1	2-2-2	5020	30	1
F0147	3	4.1.1	2	2-2-10	6112	15	3

TEST SCHEDULE

Period	Test Number
40	5020
55	6112
80	7103

TRIDENT EXTERIOR COMMUNICATIONS SYSTEM (ECS)

A-111-4251

WRITTEN TEST ADMINISTRATORS GUIDE

WRITTEN TEST NO. 121A

OPERATIONAL DESCRIPTION OF THE DSS

August 1991

WRITTEN TEST ADMINISTRATOR'S GUIDE

TRIDENT EXTERIOR COMMUNICATIONS SYSTEM (ECS)

A-111-4251

I. Instructions To Administrator

A. Prior to the start of testing:

1. Cover or Remove all training materials that could assist the trainees in answering test items.

2. Inform trainees that they have 50 minutes for the test.

3. Provide pencils and scratch paper as necessary.

4. Read the test instructions to the trainees.

5. Provide pertinent reference documentation.

6. Honor local instruction pertinent to testing as applicable.

B. After completing the test:

1. Collect and inventory all testing material.

2. Check test for marks made by trainees.

3. Review test with trainees.

4. Evaluate any test challenged by trainees.

5. Apply local instructions as necessary.

II. EVALUATION INSTRUMENT: N/A

III. GRADING CRITERIA: As per NAVEDTRA 135, Appendix B7, Translation of the Raw Score on a Written Test to a Grade.

IV. INSTRUCTIONS TO THE TRAINEE

A. This is a completion or short answer test.
B. On the answer sheet print your name and social security number.
C. Anyone caught cheating fails and is subject to disciplinary action.
D. The time to take this test is 50 minutes.
E. This test completes Your Knowledge Course Learning Objective 1.

TRIDENT EXTERIOR COMMUNICATIONS SYSTEM (ECS)

A-111-4251

WRITTEN TEST ADMINISTRATORS GUIDE

WRITTEN TEST NO. 121A

OPERATIONAL DESCRIPTION OF THE DSS

August 1991

TRIDENT EXTERIOR COMMUNICATIONS SYSTEM

SECTION/TOPIC 1.1 TEST #11111
Date: October 1991 Revised

1. The function of the Power Distribution Group is to _____.

2. List the major functional areas of the Power Distribution Group.

a.

b.

c.

d.

e.

3. The function of the AN/BRR-6 is to _____.

4. List the function of each to support normal operation of the AN/BRR-6.

a. Towed Buoy TB-17/BRR-6 (Bangor) or Towed Buoy TB-18A/BRR-6 (Kings Bay)

b. Receiver Group OR-197/BRR-6

c. Special Purpose Electrical Cable Assembly CX-130/53/BRR-6

d. Buoy Cradle MT-490/5/BRR-6

e. Reeling Machine RL-275/BRR-6

f. Sensor Group OA-890/6/BRR-6

g. Buoy Door Sensing Switch

h. Buoy Control Indicator C-10/256A/BRR-6

i. Antenna Control Indicator C-10/257/BRR-6

j. Buoy Depth Control Indicator C-10/258A/BRR-6

k. Relay Assembly RE-1115/BRR-6

l. Interconnecting Box J-3461/BRR-6

m. Towed Array Control Indicator Panel

Questions 5 - 29 omitted for this example

4. Describe preventive maintenance procedures for the following:

a. Control, Monitor, and Test (CMT) Subsystem

(1) Interface Unit J-3565/BSC-1 (Message Interface Unit)

(2) Interface Unit J-3566/BSC-1 (Digital Interface Unit)

(3) Interface Unit J-3568/BSC-1 (HASP/Magnetic Tape Unit interface)

(4) Recorder-Reproducer Control C-10/447/BSC-1

(5) Recorder-Reproducer Unit RD-442/BSC-1

(6) Comparator CM-50/7/BSC-1

b. Data Switching Subsystem (DSS)

(1) SA-2199/BSC-1, SA-220/0//BSC-1, and SA-220/1/BSC-1 Switching Units

(2) Signal Data Converter C-3510/B/U

c. Very Low Frequency/Low Frequency (VLF/LF) Subsystem

(1) Radio Receiver R-210/9/BSC-1

(2) Radio Receiver R-2320//UAR

(3) Digital Data Processor C-10/71B/W

(4) Digital Data Demodulator MD-1191/WAR-B

(5) Electrical Equipment Enclosure C-8410//WAR-B

(6) Power Supply PP-80/98/BSC-1

d. High Frequency/Ultra High Frequency (HF/UHF) Subsystem

(1) Radio Receiver-Transmitter R-110/7(V)12/WAC-3(V)

(2) Voice Switch Unit Control C-10/975

(3) Command Center Telephone Terminal

e. Support Subsystem

(1) Teleprinter T-624/U

(2) Power Distribution Group

(3) Audio Tape Recorder CMS 10/22

(4) AN/BSC-1 Electronic Equipment Air Coolers subsystems and Equipment

TRIDENT EXTERIOR COMMUNICATIONS SYSTEM (ECS)

A-111-4251

PERFORMANCE TEST ADMINISTRATORS GUIDE

PERFORMANCE TEST NO. 121A

OPERATIONAL DESCRIPTION OF THE DSS

AUGUST 1991

PERFORMANCE TEST ADMINISTRATOR'S GUIDE

TRIDENT EXTERIOR COMMUNICATIONS SYSTEM (ECS)

A-111-4251

I. Instructions To Administrator

A. Prior to the start of testing:

1. This job sheet will aid you in becoming proficient in performing adjustments on the Power Supply PP-7474/BSC-1 to support documented corrective maintenance.

2. You will be evaluated on your observance of safety precautions during performance of this job sheet. In addition, strict adherence to documented procedures will be closely monitored.

3. Inform trainees that they have 50 minutes for the test.

4. Provide pencils and scratch paper as necessary.

5. Provide pertinent reference documentation

6. Honor local instruction pertinent to testing as applicable.

EQUIPMENT

1. AN/BSC-1 Trainer

2. Test Equipment

a. Digital Multimeter, Fluke Model 8600A-01, SCAN/SCAT 4212

3. Tools

a. Flat-tip screwdriver, 8-inch, 5/16-inch tip, LA 1613

b. Offset screwdriver, NSN 5120-00-287-2130

c. Open end wrench, 1/2-inch, 4-inch, LA 2516

d. Phillips screwdriver, No. 2, 8-inch, LA 2838

B. After completing the test:

1. Collect and inventory all tools.

2. Shut down all power supplies.

3. Review test with trainees.

4. Evaluate any test area challenged by trainees.

5. Apply local instructions as necessary.

II. Evaluation Instrument

A. Job sheet No. 4-5-1-1

B. Steps: There are 2 steps to be evaluated: PE checks and PE adjustments.

C. Description of errors: The most common error made by the trainee is reading multimeter wrong.

III. Grading Criteria

A. Step 1 = checklist evaluation as satisfactory/unsatisfactory on the reading.

B. Step 2 = Rating scale based on time, accuracy (+/-5%), safety, use of equipment, and procedures.

IV. Instructions to the Trainee

A. Remember TTO Procedures. There is a 50-minute time limit.

B. This job sheet will aid you in becoming proficient in performing adjustments on the Power Supply PP-7474/BSC-1 to support documented corrective maintenance.

C. You will be evaluated on your observance of safety precautions during performance of this job sheet. In addition, strict adherence to documented procedures will be closely monitored.

Performance Record Sheet

Name: _____

SSN: _____

Class No: _____

Start Time: _____

Stop Time: _____

Score: _____

JOB SHEET F0147-5-1-1

POWER SUPPLIES PP-7474/BSC-1 AND PP-7475/BSC-1 ADJUSTMENT PROCEDURES

A. INTRODUCTION

1. This job sheet will aid you in becoming proficient in performing adjustments on the Power Supply PP-7474/BSC-1 to support documented corrective maintenance.

2. You will be evaluated on your observance of safety precautions during performance of this job sheet. In addition, strict adherence to documented procedures will be closely monitored.

B. EQUIPMENT

1. AN/BSC-1 Trainer

2. Test Equipment

a. Digital Multimeter, Fluke Model 8600A-01, SCAN/SCAT 4212

3. Tools

a. Flat-tip screwdriver, 8-inch, 5/16-inch tip, LA 1613

b. Offset screwdriver, NSN 5120-00-287-2130

c. Open end wrench, 1/2-inch, 4-inch, LA 2516

d. Phillips screwdriver, No. 2, 8-inch, LA 2838

C. REFERENCES

1. EE109-AL-MMO-010/W153-DSS, Data Switching Subsystem Operation and Maintenance Instructions, Volume 1

JOB SHEET F0147-5-1-1
NOTES

The adjustment procedures for the Power Supply PP-7474/BSC-1 are identical to the adjustment procedures for the Power Supply PP-7475/BSC-1.

D. JOB STEPS

Step 1. Perform the power supply voltage checks as described in paragraphs 6-2.a through 6-2.a(4) and table 6-2. Record your readings in the spaces provided. Inform the instructor of any out of tolerance readings.

PS1: _____ PS2: _____ PS3: _____

Note: Instructor mark SAT/UNSAT.

INSTRUCTOR CHECK _____
SAT

Step 2. Perform the power supply voltage adjustments as described in paragraphs 6-2.a(5) through 6-2.a(12) to correct the power supply(s) which are not within the specified tolerances.

Use a 10 point rating scale:

a. Procedures_____
b. Safety_____
c. Accuracy_____
d. Use of equipment____

INSTRUCTOR CHECK _____
SAT

Step 3. Return the equipment to its original operating condition.

INSTRUCTOR CHECK _____
SAT

TAB A-8

PILOT COURSE MONITORING REPORT

PILOT COURSE MONITORING REPORT

LOCATION: TRITRAFAC BANGOR
TITLE: Trident Exterior Communications System
PERIOD OF REPORT: 17 Mar – 22 May 91
CIN: A-111-4251

MONITORS/REPRESENTING: ETCS Trueman (Pilot Team Chairman)
TRITRAFAC, BANGOR
ETC Upton (Course Monitor)
TRITRAFAC, BANGOR

I. ADMINISTRATION

A. Facilities. The present facility at TRITRAFAC, BANGOR is large enough to accommodate 24 trainees. However, since the equipment utilized for the follow-on course can only accommodate 12 trainees, it is recommended that the Exterior Communications System class size be held to a maximum of 12 trainees.

B. Safety: TTO and specific safety hazards were called out before each laboratory.

C. Security: Not applicable as this course is unclassified.

D. Allocation: This course can be taught in 9 weeks, as planned, with a total of 360 contact hours.

E. Critique Sheets (Summary of trainee comments)

1. Overall, trainee comments were favorable regarding the course content and the instructors.

2. Trainees felt the skills and knowledge acquired from the course would be directly applied on the job.

3. A number of trainees felt the course should have been a week longer in order to slow the pace down and provide more time for studying before the tests.

II. CURRICULUM VALIDATION

A. Lesson Plan

1. This command scheduled a pilot and taught this course from 28 January to 10 April 1991. However, shortly into the pilot, the course monitors and LT Duncan, Deputy for Shore/Technical Training (NETC T2), all agreed that the lesson materials should be revised and a second course pilot conducted.

2. The following changes were made to the lesson materials prior to the repilot:

a. The revised Training Level Assignment (TLA) dated 4 December 1991 was utilized vice the TLA dated 8 November 1990.

b. More information supporting each of the main headings was included in the Lesson Plan. The informational bullets were included to assist the instructors in personalizing their Lesson Plan and in teaching the course.

c. Topics were resequenced for better teach ability and flow.

d. The Resource Requirements list was revised to accurately reflect required training materials.

e. PPP line items from Logistics Leadership and Management Table B0/ 61 were not included in the Lesson Plan. These items will be taught in General Military Training (GMT).

B. Trainee Guide

1. The Trainee Guide was revised to correspond with the Lesson Plan and study questions on the reading assignments were included. The instructors reviewed the assigned study questions at the start of each day.

2. Due to the short turnaround time, the Trainee Guide used in the pilot was a cut-and-paste revision of the previous Trainee Guide.

3. It was decided that the trainees should write in the Trainee Guide and take it with them to their next command. While this will result in higher printing costs, it was determined that the revised Trainee Guide contains a considerable amount of valuable information that the trainees could use at their next command.

C. Equipment/Tools: All equipment and tools were adequate except the AN/ASM-4D Multimeter input impedances too low and gives inaccurate readings. Digital Voltmeter replacement will be required.

D. Instructional Media Materials: All transparencies will be screened for readability at 20 feet from the screen.

E. Instruction: The instructors were prepared to teach all of the lessons and the lessons were well presented, which kept the interest level high throughout the course.

F. Testing: Only one version of the test series was completed in time for the pilot. The course-testing officer has been tasked to develop alternate test series for the course.

III. INSTRUCTIONAL ACCURACY/ADEQUACY: Not applicable

IV. MINORITY REPORTS: None

V. OTHER: As the Monitoring Team Chairman, I recommend that this course be revised as is indicated by the redlined Lesson Plan. I recommend that all subsequently scheduled classes be taught using the redlined Lesson Plan until smooth copies are promulgated.

TAB A-9

EXERCISE CONTROLLER GUIDE

NOT SUPPORTED BY A LESSON PLAN

This page intentionally left blank

TRIDENT COMMON NAVIGATION TECHNICIAN

COMPUTER BASED TRAINER

EXERCISE CONTROLLER GUIDE

1 JUNE 1996

PUBLISHED BY DIRECTION OF COMMANDER, NAVAL EDUCATION AND TRAINING COMMAND

FOR TRAINING USE ONLY

LIST OF EFFECTIVE PAGES

Exercise/ Page No.	Change in Effect	Exercise/ Page No.	Change in Effect	Exercise/ Page No.	Change in Effect	Exercise/ Page No.	Change in Effect
Title Page	Original	E3110-1	Original				
ii	Original	(1) thru (5)	Original				
Letter of Promulgation	Original						
iv thru xii	Original						
E3100-1	Original						
E3100-2	Original						
E3100-3	Original						
E3100-4	Original						
E3100-5	Original						
E3100-6	Original						
E3100-7	Original						
E3100-8	Original						
E3100-9	Original						
E3100-10	original						

CHANGE RECORD

Number and Description of Change	Entered by	Date

HAZARD AWARENESS NOTICE

All personnel involved in operation or maintenance of electronic equipment must be thoroughly familiar with the electronic equipment safety precautions contained in Electronic Installation and Maintenance Book, General, NAVSEA SE000-00-EIM-100, Section 3, and Naval Ships' Technical Manual, Chapter 300, S9086-KC-STM-010/CH-300, Section 2. In addition, attention is directed to the Navy Safety Program Instructions, OPNAVINST 5100.19 (series) and 5100.23 (series), and the safety training requirements contained in NETCINST 5100.1 (series).

This equipment employs voltages which are dangerous and may be fatal if contacted by operating or maintenance personnel. There are mechanical safety devices associated with this equipment that must be maintained in a constant state of readiness to preclude causing injury to personnel and/or damage to equipment. Extreme caution must be exercised when working with or handling this equipment. Some components are extremely heavy. Rigid pre-inspections must be made for handling equipment to ensure their safety, and safety summaries must be read to the handling teams prior to conducting dangerous evolutions. Hazard awareness dictates that this equipment must always be viewed as an integral part of a system and not as a component. While every practical precaution has been incorporated into this equipment, it is not possible or practical to try to list every condition or hazard that you may encounter. Therefore, all operating or maintenance personnel must at all times observe as a minimum, the following:

DON'T SERVICE OR ADJUST ALONE

Under no circumstances will a person operate or maintain equipment without the immediate presence or assistance of another person capable of rendering aid. Unless under direct supervision of a qualified person, no person shall operate or maintain equipment for which they are unqualified.

HAZARD AWARENESS NOTICE

DON'T TAMPER WITH INTERLOCKS

Reliance on interlock circuits to remove power from the equipment is never to be assumed. Until operation of the interlock is verified, equipment is assumed to be in the hazardous mode of operation. Under no circumstances will any access gate, door, or interlock switch be removed, bypassed, or modified in any way by other than authorized maintenance personnel and then only after observing proper tag-out procedures.

REPORT ALL HAZARDS

If at any time you detect a hazard, it is your responsibility to report the hazard to ensure that it is corrected. If the hazard is detected during a teaching session, verbally call a "TRAINING TIME OUT" (TTO), raise a clenched fist if the verbal TTO signal cannot be heard. Stop any exercise if a trainee indicates a TTO. If at any time you detect a "new" or "suspected new" hazard, particularly due to equipment installation, modification, or repair, it is your responsibility to ensure that a SAFETYGRAM is submitted to the Naval Safety Center, Norfolk, VA in accordance with OPNAVINST 5102.1 (series). This will ensure that this hazard will be investigated, publicized, or corrected, as required. Additionally, SSPINST 3100.1 (series) requires SWS personnel to submit special check TFRs when a potential or actual unsafe condition is noticed that could cause injury to personnel and/or damage to equipment. When a problem/failure occurs involving the safety of personnel or equipment and it cannot be immediately resolved by command/technical assistance on-site, the TFR data shall be transmitted to SSP and others by Naval Message.

INFORM TRAINEES OF THEIR RESPONSIBILITY FOR SAFETY

Inform trainees to verbally call a TTO if they detect a hazardous condition during any teaching session (lab or theory), or to raise a clenched fist to indicate a TTO if the verbal command cannot be heard.

FRONT MATTER Page

Title Page i
List of Effective Pages . . ii
Letter of Promulgation .. . iii
Change Record iv
Hazard Awareness Notice . . . v
Table of Contents vii
How To Use The Exercises . viii
Exercise Selection Index . . ix

E3100-1 COMPUTER BASED TRAINER INTRODUCTION

E3100-2 INERTIAL NAVIGATION PRINCIPLES

E3100-3 GLOBAL POSITIONING SYSTEM PRINCIPLES

E3100-4 CORRELATION VELOCITY PRINCIPLES

E3100-5 EM LOG CALIBRATION

E3100-6 NSS FIX TAKING

E3100-7 ESGN CALIBRATION

E3100-8 ESGN STARTUP

E3100-9 DUAL ESGN RETURN TO NAVIGATE

E3100-10 ESG AT-SEA REINITIALIZATION

E31110-1 ESGN ADVANCED FAULT ISOLATION

REFERENCE MATERIAL Page

Master Materials List . . . . . (1)

Profile Item-to-Exercise
Objective Assignment Chart . . (5)

HOW TO USE THE EXERCISES

INTRODUCTION TO THE EXERCISE CONTROLLER GUIDE

This Exercise Controller Guide (ECG) is a compilation of independent exercises to be used with the Computer Based Trainer. Each exercise provides scenarios and selected procedures to accomplish specific, predetermined training objectives.

The exercises are designed to provide an effective means to develop and reinforce those skills required as a basic navigation watch stander. Each exercise supports a controller-to-trainee relationship (to be used by controller to conduct both individual or team training and assessment). The core of the ECG is a series of training exercises which can be used to sequentially represent a normal refit period and/or patrol period.

EXERCISE SELECTION

The key to using the ECG is of the process of selecting the exercises for use in training. Two methods are available for use by the school's instructional staff: the prescribed order identified by formal courseware or by use of the Exercise Selection Index (ESI).

The exercise selection by A-193-0375, A-193-0378, A-193-0379, A-193-0389, and A-193-0390 has been designed to represent those tasks, which would normally be executed/encountered during refit and patrol periods. The order of selection established will expose the trainee to those tasks, in the proper sequence, necessary to perform a refit and patrol.

The exercises contained in this ECG are used in conjunction with formal and informal courses of instruction: TRIDENT Common Navigation Technician Conversion (A-193-0375), TRIDENT Navigation Operator (A-193-0378), TRIDENT Navigation Maintenance (A-193-0379), ESGN Theory and Maintenance I (A-193-0389), ESGN Theory and Maintenance II (A-193-0390), and responsive training.

Many exercises may be applicable for use in other curricula and will be identified at a later date.

Exercise selection utilizing the index is an alternate method of selecting one or more exercises for a training program. Depending on the program and its purpose, exercises on a particular type of operational task or training level may be included which are suited to the individuals being trained. This method is useful when needed training emphasis is known.

EXERCISE SELECTION INDEX

EXERCISE NUMBER	EXERCISE OBJECTIVE	EXERCISE SCENARIO	SYS/SYBSYSTEM CONFIGURATION	EXER LENGTH (MIN)	TRNG LEVEL (TOS)	DIFF INDEX
E3100-1	To provide training necessary for students to operate the Computer Based Trainer Student Workstation	Computer Based Trainer Introduction	Computer Based Trainer	30	1	Basic
E3100-2	To provide training necessary for students to describe the inertial navigation principles used in the Navigation Subsystem	Inertial navigation Principles	Computer Based Trainer	60	T1	Basic
E3100-3	To provide training necessary for students to describe the three Global Positioning System (GPS) segments and concepts of GPS fix taking	Global Positioning System Principles	Computer Based Trainer	60	T1	Basic
E3100-4	To provide training necessary for students to describe the NSS Correlation SONAL principles used in the Navigation Subsystem for the D5 Weapon System	Correlation Velocity Principles	Computer Based Trainer	60	T1	Basic
E3100-5	To provide training necessary for students to perform normal and abnormal EM Log calibration procedures	EM Log Calibration	Computer Based Trainer	30 or 45	01 or 02	Basic or Advanced

EXERCISE TITLE SHEET

EXERCISE NO.	TITLE	SHEET
E3100-6	NSS FIX TAKING	X of 5

OBJECTIVE:

1. To provide training necessary for students to perform basic and advanced NSS fix taking procedures

Exercise Length (Min)

Training Level (TOS)

Difficulty Index
01 or 02

REQUIREMENTS:

1. Equipment:
   a. Computer Based Trainer
   b. Parallel Rule
   c. Scotch Tape
   d. Tracing Paper
2. Publications:
   a. OD 61600, Vols. 1,3, and 4
   b. OP 4637, Vol. 5, Parts 1 and 2 (Kings Bay)

TRAINING APPROACH: Basic or Advanced

This exercise demonstrates the operational tasks associated with NSS fix taking.

SPECIAL INSTRUCTIONS:

Instructors must have the Computer Based Trainer set up and students logged on as called out in Exercise E3100-1.

Students must have completed Exercise E3100-1 prior to beginning this exercise. Inform the students that the Map Record Number (MRN) for this exercise is 55.

EXERCISE TITLE SHEET (Continued)

EXERCISE NO.	TITLE:	Sheet
E3100-6	NSS FIX TAKING	xi of 5
OBJECTIVE:		Exercise Length (Min)
		Training Level (TOS)
		Difficulty Index
REQUIREMENTS: C. OP 4671, Vol 3, Parts 1 and 2 (Bangor)	TRAINING APPROACH: SPECIAL INSTRUCTIONS:	

EXERCISE DATA SHEET

EXERCISE NO.	TITLE:	Sheet
E3100-6	NSS FIX TAKING	Xii of 5

A. Datasheet Index - Required for each student (Basic or Advanced)

1. Zone Evaluation Datasheet (ZED) (Blank)

2. Precise Bathymetric Navigation Zone (U) PBNZC LANT 12-123 (Kings Bay) or Precise Bathymetrics Navigation Zone (U) PBNZC PAC 12-123 (Bangor)

B. Typical Chart Layout at Student Workstation (Advanced)

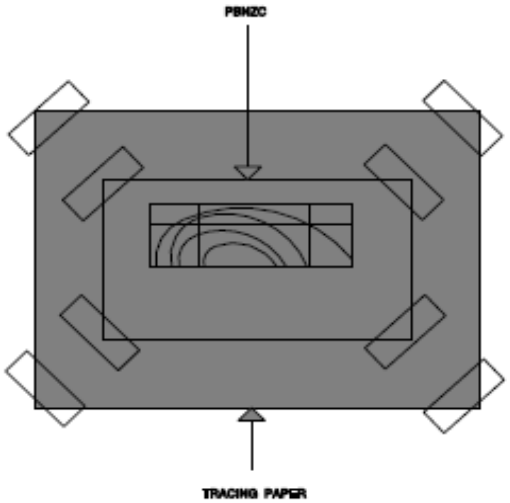

EVENT-ACTIVITIES SHEET

EXERCISE NO.	TITLE:	Sheet
E3100-6	NSS FIX TAKING	Xiii of 5

Time	Event	Controller Activity	Operator Activity
Pre-comex	1. Class Options	1. Select **Lesson Options** and then **Class** From the Instructor's Status Monitoring Screen. On the Lesson Options screen, Select: a. under the Class group, the appropriate Class number b. under the Lesson group, **NSS Fix Taking** c. under the Options group, **Basic** or **Advanced** and **Enable lesson**	
Pre-0 comex	2. PBNZC Setup	2. For the Advanced option, direct the students To set up the PBNZC as illustrated on the Exercise Data Sheet.	2. Set up PBNZC.
Pre-comex	3. Course Selection	3. Refer to the Special Instructions on the Exercise Title Sheet of this exercise. Direct the students to select **Operation** for course selection.	3. Select **Operation**.

EVENT-ACTIVITIES SHEET (Continued)

EXERCISE NO.	TITLE:	Sheet
E3100-6	NSS FIX TAKING	xiv of 5

Time	Event	Controller Activity	Operator Activity
T+0	4. Comex NSS Fix Taking	4. Direct the students to perform the exercise by selecting **NSS Fix Taking.**	4. Select **NSS Fix Taking.**
T+10	5. Set & Drift Compensation	5. For the Advanced Option, direct the students to plot the ship's position on the PBNZC as they transit the Feature Area and to notify CONN if a course change is required.	5. Plot Ship's position on the PBNZC.
T+90	6. Main Menu	6. Direct the students to return to the Main Menu upon completion of the lesson.	6. **EXIT** to the Main Menu upon completion of the lesson.
T+ as re-quired	7. Student Log Off	7. If required, direct the students to log off.	7. **EXIT** to the Log on screen.

MASTER MATERIALS LIST

MASTER MATERIALS LIST

Course: TRIDENT Common Navigation Technician Computer Based Trainer

Class Size: Maximum of 10

A. TEXTS

Navy No.	Title	Per Tr.	Per Inst.	Per Cl.
ECG-N5	TRIDENT Common Navigation Technician Computer Based Trainer Exercise Controller Guide prepared by Chief of Naval Education and Training		1	

B. REFERENCES

Navy No.	Title	Per Tr.	Per Inst.	Per Cl.
OD 61600	TRIDENT SWS Common Navigation Standard Operating Procedures (CONFIDENTIAL DOCUMENT)	1	1	
OP 4637, Vol. 5, Part 1 Navigation Equipment (Kings Bay)	Navigation Training System for TRIDENT SWS Common	1		
OP 4637, Vol. 5, Part 2 Navigation Equipment (Kings Bay)	Navigation Training System for TRIDENT SWS Common	1	1	

MASTER MATERIALS LIST

B. REFERENCES (Continued)

Navy No.	Title	Per Tr.	Per Inst.	Per Cl.
OP 4671, Vol. 3, Part 1 Navigation Equipment (Bangor)	Navigation Training System for TRIDENT SWS Common	1		
OP 4671, Vol. 3, Part 2 Navigation Equipment (Bangor)	Navigation Training System for TRIDENT SWS Common 1	1		
0652-026-7, Vol. 3, Parts 1 and 3	ESGN Mk 1 Mod 0 Description and Fault Isolation Support Data	1	1	
0652-026-8	ESGN Mk 1 Mod 0 Fault Isolation and Repair	1	1	
0652-027-4	ESGN Mk 1 Mod 0 Operation and Preventive Maintenance	1	1	
0652-031-5, Vol. 2, Parts 1, 2, and 4	TRIDENT SWS Common Navigation Subsystem	1	1	

MASTER MATERIALS LIST

C. EQUIPMENT

Item No.	Nomenclature	Part No.	Tech. Ref.	Per Tr.	Per Inst.	Per Cl.
1.	Computer Based Trainer					1
2.	Parallel Rule			1		
3.	Scotch Tape					1
4.	Tracing Paper (roll)					1

D. OTHER

Item No.	Description	Per Tr.	Per Inst.	Per Cl.
1.	AAA Setup Datasheet (filled in)	1	1	
2.	Berthing Locations List	1	1	
3.	Data Ident: A_-2601, ESGN Optical Alignment Terms (filled in)	1	1	
4.	Data Ident: A_-2602, Polar Gyro Parameters Datasheet (blank)	1	1	
5.	Data Ident: A_-2602, Polar Gyro Parameters Datasheet (filled in)	1	1	
6.	Data Ident: A_-2603, Equatorial Gyro Parameters Datasheet (blank)	1	1	

MASTER MATERIALS LIST

G. OTHER (Continued)

Item No.	Description	Per Tr.	Per Inst.	Per Cl.
7.	Data Ident: A_-2603, Equatorial Gyro Parameters Datasheet (filled in)	1	1	
8.	Data Ident: A_-2604, ESG Test Stand Parameters Datasheet (blank)	1	1	
9.	Data Ident: A_-2604, ESG Test Stand Parameters Datasheet (filled in)	1	1	
10.	Data Ident: A_-2605, EMA Calibration Worksheet (blank)	1	1	
11.	Data Ident: A_-2606, EMA/Platform/Optical Parameters Datasheet (blank)	1	1	
12.	Data Ident: A_-2606, EMA/Platform/Optical Parameters Datasheet (filled in)	1	1	
13.	Precise Bathymetric Navigation Zone (U) PBNZC LANT 12-123 (Kings Bay)	1	1	
14.	Precise Bathymetric Navigation Zone (U) PBNZC PAC 12-123 (Bangor)	1	1	
15.	Worksheet 2-1, Optical Calibration Case Mirror to ORA Worksheet (blank)	1	1	
16.	Worksheet 2-2, Optical Calibration U Mirror Worksheet (blank)	1	1	
17.	Worksheet 92-1 (blank)	1	1	
18.	Zone Evaluation Datasheet (ZED) (blank)	1	1	

MASTER MATERIALS LIST (Continued)

G. OTHER (Continued)

Item No.	Description	Per Tr.	Per Inst.	Per Cl.
7.	Data Ident: A_-2603, Equatorial Gyro Parameters Datasheet (filled in)	1	1	
8.	Data Ident: A_-2604, ESG Test Stand Parameters Datasheet (blank)	1	1	
9.	Data Ident: A_-2604, ESG Test Stand Parameters Datasheet (filled in)	1	1	
10.	Data Ident: A_-2605, EMA Calibration Worksheet (blank)	1	1	
11.	Data Ident: A_-2606, EMA/Platform/Optical Parameters Datasheet (blank)	1	1	
12.	Data Ident: A_-2606, EMA/Platform/Optical Parameters Datasheet (filled in)	1	1	
13.	Precise Bathymetric Navigation Zone (U) PBNZC LANT 12-123 (Kings Bay)	1	1	
14.	Precise Bathymetric Navigation Zone (U) PBNZC PAC 12-123 (Bangor)	1	1	
15.	Worksheet 2-1, Optical Calibration Case Mirror to ORA Worksheet (blank)	1	1	
16.	Worksheet 2-2, Optical Calibration U Mirror Worksheet (blank)	1	1	
17.	Worksheet 92-1 (blank)	1	1	
18.	Zone Evaluation Datasheet (ZED) (blank)	1	1	

PROFILE ITEM-TO-EXERCISE OBJECTIVE ASSIGNMENT CHART

TABLE	ITEM/ SUBITEM	TRNG LEVEL (TOS)	ECG VOL	EXERCISE NO.	EXER OBJ
E3100	1-1-5				
	a	T1		E3100-2	1
	b	T1		E3100-3	1
	d	T1		E3100-4	1
	2-1-1	01			
	b	02		E3100-6	1
	b	01		E3100-6	1
	e	01		E3100-5	1
	e	01		E3100-7	1
	2-1-2	02		E3100-5	1
	2-1-2	02		E3100-7	2
	2-1-2	02		E3100-8	1
	2-1-2	02		E3100-9	1
	2-1-2	02		E3100-10	1

TABLE	ITEM/ SUBITEM	TRNG LEVEL (TOS)	ECG VOL	EXERCISE NO.	EXER OBJ
E3110	2-2-1	C1		E3110-1	1
E3110	2-2-1	C2		E3110-1	1
E3110	2-2-3	C1		E3110-1	1
E3110	2-2-3	C2		E3110-1	1
E3110	2-2-4	C1		E3110-1	1
E3110	2-2-4	C2		E3110-1	1
E3110	2-2-5	C1		E3110-1	1
E3110	2-2-6	C1		E3110-1	1
E3110	2-2-7	C1		E3110-1	1
E3110	2-2-9	C2		E3110-1	1
E3110	2-2-10	C1		E3110-1	1
E3110	2-2-10	C2		E3110-1	1

TAB A-10

EXERCISE CONTROLLER GUIDE

SUPPORTED BY A LESSON PLAN

TORPEDOMAN TRAINING

INSTRUCTOR GUIDE

1 JUNE 1996

This example shows that the CCA has authorized use of the Optional Name—INSTRUCTOR GUIDE.

PUBLISHED BY COMMANDER, NAVAL EDUCATION AND TRAINING COMMAND,
LEARNING AND DEVELOPMENT DIVISION (N7)

FOR TRAINING USE ONLY

LIST OF EFFECTIVE PAGES

Page No.	Change in Effect	Page No.	Change in Effect	Page No.	Change in Effect	Page No.	Change in Effect
Title Page	Change 5	2C01-1-2-1, 2C01-1-2-2	Change 3	2C06-1-1-4 thru 2C06-1-1-14	Change 3	M203-1-2-3 thru M203-1-2-13	Change 4
ii thru iiB	Change 5	2C01-1-2-3, 2C01-1-2-4	Change 5	2C06-1-1-15, 2C06-1-1-16	Change 5	M203-1-2-14 thru M203-1-2-18	Change 3
Letter of Promulgation	Original	2C01-1-2-5 thru 2C01-1-2-21	Change 3	2C06-1-1-17 thru 2C06-1-1-24	Change 3	M203-1-3-1 thru M203-1-3-22	Change 3
iv	Original	2C01-1-2-22	Change 4	Tab Part M203	Change 3	M203-1-4-1 thru M203-1-4-6	Change 3
v	Change 3	2C01-1-2-23 thru 2C01-1-2-28	Change 3	M203-1-1	Change 4	M203-1-5-1, M203-1-5-2	Change 5
vi	Change 4	Tab Part 2C06	Change 3	M203-1-2	Change 3	M203-1-5-3 thru M203-1-5-5	Change 3
vii	Change 3	2C06-1-1, 2C06-1-2	Change 3	M203-1-1-1, M203-1-1-2	Change 5	M203-1-5-6, M203-1-5-7	Change 5
viii thru xxvi	Change 5	2C06-1-1-1 thru 2C06-1-1-3	Change 5	M203-1-1-3 thru M203-1-1-12	Change 3	M203-1-5-8	Change 3
Tab Part 2C01	Change 5			M203-1-2-1, M203-1-2-2	Change 5		
2C01-1-1, 2C01-1-2	Change 3						
2C01-1-1-1 thru 2C01-1-1-18	Change 5						

LIST OF EFFECTIVE PAGES (Continued)

Page No.	Change in Effect	Page No.	Change in Effect	Page No.	Change in Effect	Page No.	Change in Effect
M203-1-6-1 thru M203-1-6-4	Change 3						
M203-1-7-1 thru M203-1-7-6	Change 3						
(1) thru (18)	Change 5						
							iii

CHANGE RECORD

Number and Description of Change	Entered by	Date

COURSE LEARNING OBJECTIVES

Upon successful completion of this course, the trainees will acquire the following knowledge and skills and be able to:

Knowledge		Skills
1. State the purpose, function, and location and describe the documentation of the: a. Torpedo Launching System b. MK 48 Torpedo Ancillary Equipment c. Ordnance Handling Equipment		1. Perform all operational procedures with supervision on the: a. Torpedo Launching System b. MK 48 Torpedo and Related Equipment: (1) OTTO fuel spill procedures (2) Hot Run c. Ordnance Handling Equipment
2. Describe the theory necessary to support and understand the performance of all operational tasks, and basic corrective maintenance without going into detailed logic, circuit analysis, individual program flow diagrams, or detailed mechanical component breakdown of the: a. Torpedo Launching System b. MK 48 Torpedo and Ancillary Equipment c. Ordnance Handling Equipment		2. Perform documented fault isolation and repair procedures with supervision on the: a. MK 48 Torpedo and Related Equipment b. Torpedo Launching System c. Ordnance Handling Equipment

TORPEDO LAUNCHING SYSTEM

This part contains information from PPP tables 2CO1, 2CO6, and M2O3.

SECTION 1. THEORY AND OPERATION OF TORPEDO LAUNCHING SYSTEM (t1, T2, O1, O2)

CHANGE 5
A-123-0001

SECTION 1. THEORY AND OPERATION OF THE TORPEDO LAUNCHING SYSTEM (TLS)

TOPIC NO.	TOPIC TITLE	PAGE
1.	DOCUMENTATION DESCRIPTION OF THE DWOS	2C01-1-1-1
2.	GENERAL,PHYSICAL,FUNCTIONAL INTERFACE, AND OPERATION DESCRIPTION, AND OPERATIONS OF THE TORPEDO LAUNCHING SYSTEM	2C01-1-2-1

TOPIC 2. GENERAL, PHYSICAL, FUNCTIONAL INTERFACE, AND OPERATIONAL DESCRIPTION AND OPERATIONS OF THE TORPEDO LAUNCHING SYSTEM

Topic Learning Objectives

Upon successful completion of this topic, the trainee will be able to:

1. State the purpose of the Torpedo Launching System to support normal operation.

2. State the components of the Torpedo Launching System to support normal operation, including the function of each.

   a. MK 68 Torpedo Tube
   b. Defensive Weapons Launch Console (DWLC)
   c. MK 17 Torpedo Ejection Pump (TEP)
   d. Guidance Wire Streamed Detector System

3. State the security requirements for the Torpedo Launching System to support normal operation.

4. Define the abbreviations, terms, and symbols used with the Torpedo Launching System to support all operations.

5. State the operational characteristics, capabilities, and limitations of the Torpedo Launching System to support all:

   a. Modes of operation
   b. Types of weapons/devices

6. Describe all major and associated components of the Torpedo Launch System to support all operations.

   a. Barrel
   b. Breech door and breech door mechanism
   c. Muzzle door and muzzle door mechanism
   d. Slide valve
   e. Stop mechanism
   f. Interlock mechanism
   g. Turbine ejection system
   h. Control valves
   i. Shutter door assembly
   j. Port/stbd miscellaneous valve position panels
   k. Indicator panel
   l. Ejection pump fuse panel
   m. Port/stbd torpedo tube fuse panels
   n. Weapon Launch Console MK 96 Mod 0
   o. Port/stbd torpedo tube control panels
   p. Power supply sections
   r. Guidance wire streamed detector

TOPIC 2. GENERAL, PHYSICAL, FUNCTIONAL INTERFACE, AND OPERATIONAL DESCRIPTION AND OPERATIONS OF THE TORPEDO LAUNCHING SYSTEM

7. Describe the functional operation of the Torpedo Launching System to support all operations, including control, sequential operation, and indications.

   a. Prelaunch
   b. Launch
   c. Postlaunch

8. Describe the function of each control, indicator, and actuator of the Torpedo Launching System in each position, condition, and color to support all operations. Include name, reference designator and indications.

9. Describe the physical and functional interface between the Torpedo Launching System and other equipment/subsystem and systems to support all operations to include:

   a. Power Sources
   b. Pneumatics
   c. Hydraulics
   d. Water
   e. Valves
   f. Manifolds

10. Describe authority, and regulations, and personnel and equipment safety precautions which are to be observed during all operations of the Torpedo Launching System. Include Electrostatic Discharge.

11. Describe normal operational tasks of the Torpedo Launching System as contained in applicable documentation.

    a. Prelaunch procedures
    b. Launch procedures
    c. Postlaunch procedures

12. Describe indications which should or may occur during all operations of the Torpedo Launching System as contained in applicable documentation, including alarms and indicators.

13. Describe tasks for casualty operation of the Torpedo Launching System as contained in applicable documentation.

14. Perform tasks for operation of the Torpedo Launching System to include prelaunch, launch, and postlaunch procedures to support normal operations.

15. Recognize and interpret all indications occurring during the performance of the operating procedures and perform appropriate operator actions to support all operations.

2CO1-1-2-1

TOPIC 2. GENERAL, PHYSICAL, FUNCTIONAL INTERFACE, AND OPERATIONAL DESCRIPTION AND OPERATIONS OF THE TORPEDO LAUNCHING SYSTEM

16. **Perform tasks for casualty operation of the Torpedo Launching System.**

17. Describe Training Safety to include Training Time Out (TTO).

Trainee Preparation

A. Trainee Support Material:

1. None

B. Reference Publications:

1. None

C. Reference Drawings:

1. None

Instructor Preparation

A. Review Assigned Trainee Material.

B. Reference Publications:

1. NAVSEA OD 44979, Vol. 4
2. NAVSEA OD 4288, Vol. 1
3. NAVSEA S9SSB-X9-SSM-BEO/(U)726V2P3C9 (SSM V2P3C9)
4. NAVSEA S9SSB-X9-SSM-RDO/(U)726V6P3B3B (SSM V6P3B3B)
5. NAVSEA 0987-LP-059-6010
6. OPNAVINST 5510.1 Series
7. NAVSEA OD 44979 Vol. 1, Part 1
8. COMSUBLANT/PACINST C8500.4 Series
9. NAVSEA SW282-DO-MMO-010/FCS MK 118/0
10. NAVSEA SW519-AA-MMA-010/TTCC
11. NAVSEA S9558-AA-MMA-030
12. NAVSEA S9558-AA-MMA-060
13. NAVSEA S9558-AA-MMA-100
14. NAVSEA 0947-LP-247-1010
15. CNTECHTRA-ST1, Vol. 39
16. CNETINST 1500.20

C. Training Materials Required:

1. ECG-W1

2. Publications:

a. NAVSEA OD 44979, Vol. 4
b. NAVSEA OP 4288, Vol. 1
c. NAVSEA S9SSB-X9-SSM-BEO/(U)726V2P3C9 (SSM V2P3C9)

2CO1-1-2-1

TOPIC 2. GENERAL, PHYSICAL, FUNCTIONAL INTERFACE, AND OPERATIONAL DESCRIPTION AND OPERATIONS OF THE TORPEDO LAUNCHING SYSTEM

d. NAVSEA S9SSB-X9-SSM-RDO/(U)726V6P3B3B (SSM V6P3B3B)
e. NAVSEA 0987-LP-059-6010
f. NAVSEA OD 44979, Vol. 1
g. NAVSEA SW519-AA-MMA-010/TTCC

3. Films:

a. MK17/0 Ejection System
b. Electrostatic Discharge (ESD)

4. Transparencies:

a. 2C01-1-1-1
b. 2C01-1-1-2
c. 2C01-1-1-3
d. 2C01-1-1-4
e. 2C01-1-1-5
f. 2C01-1-1-6
g. 2C01-1-1-7
h. 2C01-1-1-8
i. 2C01-1-1-9
j. 2C01-1-1-10
k. 2C01-1-1-11

5. Equipment:

a. Torpedo Tube Trainer Laboratory
b. Stop Watch
c. Simpson 260 or Fluke

2C01-1-2-1

TOPIC 2. GENERAL, PHYSICAL, FUNCTIONAL INTERFACE, AND OPERATIONAL DESCRIPTION AND OPERATIONS OF THE TORPEDO LAUNCHING SYSTEM

DISCUSSION POINT	RELATED INSTRUCTOR ACTIVITY
11. Safety precautions	11. Refer to SSM V2P3C9, paragraph 3.1. Reference NAVSEA OP 4288 Vol. 1, pages xi and xii and CNETINST 1500.20.
a. Personnel (1) TTO signals (verbal/gestures) (2) Mishap Plan	NOTE Take class to lab to perform exercises in ECG-W1, insure required tools and equipment are in lab.
b. Equipment	NOTE Stress Safety.
12. Operation	

2CO1-1-2-1

TOPIC 2. GENERAL, PHYSICAL, FUNCTIONAL INTERFACE, AND OPERATIONAL DESCRIPTION AND OPERATIONS OF THE TORPEDO LAUNCHING SYSTEM

DISCUSSION POINT	RELATED INSTRUCTOR ACTIVITY
a. Startup/infrequent modes of operation	a. Refer to SSM V6P3B3B, OI V6P3B3B, OI 631-12. Direct trainee to perform ECG-W1 Exercises.
(1) Initial conditions	
(a) Recognize/interpret indications	NOTE: The RIA ties the Discussion Point to be covered to a specific procedure to be followed onboard (approved operational procedure) with the exercise being performed in the Lab/Trainer
(2) Startup	
(a) Recognize/interpret indications	

2CO1-1-2-1

TOPIC 2. GENERAL, PHYSICAL, FUNCTIONAL INTERFACE, AND OPERATIONAL DESCRIPTION AND OPERATIONS OF THE TORPEDO LAUNCHING SYSTEM

DISCUSSION POINT	RELATED INSTRUCTOR ACTIVITY
(a) Recognize/interpret indications	(a) Direct trainees to perform ECG-W1 Exercises.
c. Casualty	
(1) Jettison	(1) Refer to NAVSEA OD 44979, Vol. 4, OPs 3.5 9.2. and Direct trainees to perform ECG-W1 Exercises.
(a) Recognize/interpret indications	

2CO1-1-2-1

TOPIC 2. GENERAL, PHYSICAL, FUNCTIONAL INTERFACE, AND OPERATIONAL DESCRIPTION AND OPERATIONS OF THE TORPEDO LAUNCHING SYSTEM

DISCUSSION POINT	RELATED INSTRUCTOR ACTIVITY
13. Review and summary	
14. Critique	

MASTER MATERIAL LIST

Course: Defensive Weapons Ordnance Subsystem Replacement

Class Size: As per the Formal Schools Catalog

A. TEXTS

Navy No.	Title	Per Man	Per Inst.	Per Cl.
A-123-0001	Torpedoman Training IG		1	
ECG-W1	Exercise Controller Guide ECG		1	

B. REFERENCES

Navy No.	Title	Per Man	Per Inst.	Per Cl.
NETCINST 5100.1	(NETCINST 5100.1 Title)		1	
COMSUBPACINST 4855.1	Quality Assurance Manual		1	1
COMSUBLANT/PACINST C8500.4	Convention Weapons Manual		1	
TTF-9112/TTF-8203	Instructor/Maintenance Handbook for Torpedo Tube Trainer Laboratory		1 of each	
MIP 7500 series MRCs	Torpedo Mk 48		1	1
CNTECHTRA - ST1, Vol. 39	Fault Insertion Guide - Torpedo Launching System		1	
NWP 72-1 (C)	Submarine Torpedo Reference Manual		1	

MASTER MATERIAL LIST (Continued)

C GRAPHICS

Transparency No.	Title	Per Cl.	Sources	Figure No.
M203-1-3-3	Hydraulics	1	NAVSEA OP 4023	8-2
M203-1-3-4	Tube Exit	1	NAVSEA OP 4020	3-11
M203-1-3-5	Warhead Arming (C)	1	NAVSEA OP 4020	3-1
M203-1-3-6	Pre-enable run (C)	1	NAVSEA OP 4020	3-13
M203-1-3-7	MK 21 Safing Explorer Top	1	TTF Original	

2. Wall Charts

Wall Chart No.	Description	Per Cl.	Figure No.

None

D. SUPPORT MATERIALS

1. ECG-W1 Exercises. All instruction sheets (i.e., Problem Sheets, Information Sheets, etc.) are A-123-0001, series. (All instruction sheets for this course are contained within problem guide, A-123-0001).

PROFILE ITEM-TO-TOPIC OBJECTIVE ASSIGMENT CHART

TABLE	ITEM	TOS	VOL	PART	SECT		LRNG OBJ
2C01	1-1-1	T1		2C01	1	2	1
	1-1-2	T1			1	2	2
	1-1-3	T1			1	2	4
	1-1-3	T2			1	2	4
	1-1-4	T1			1	2	5
	1-1-4	T2			1	2	5
	1-1-5	T1			1	2	3
	1-2-1	T1			1	2	6
	1-2-1	T2			1	2	6
	1-2-2	T1			1	2	8
	1-2-2	T2			1	2	8
	1-3-1	T1			1	2	7
	1-3-1	T2			1	2	7
	1-3-2	T1			1	2	8
	1-3-2	T2			1	2	8
	1-4-1d	T1			1	2	9
	1-4-1d	T2			1	2	9
	1-4-1e	T1			1	2	9
	1-4-1e	T2			1	2	9
	1-4-2a	T1			1	2	9
	1-4-2a	T2			1	2	9
	1-4-2d	T1			1	2	9
	1-4-2d	T2			1	2	9
	1-4-2e	T1			1	2	9
	1-4-2e	T1			1	2	9
	1-4-2f	T1			1	2	9
	1-5-1	T1			1	2	10
	1-5-1	T2			1	2	10

TABLE	ITEM	TOS	VOL	PART	SECT	TOPIC	LRNG OBJ
2C01 (Cont)	1-5-2	T1			1	2	11
	1-5-3	T1			1	2	12
	1-5-3	T2			1	2	12
	1-5-4	T2			1	2	13
	1-5-6	T1			1	2	10
	1-5-6	T2			1	2	10
	1-7-1	T1			1	1	1
	2-1-1	01			1	2	14
	2-1-2	01			1	2	15
	2-1-2	02			1	2	15
	2-1-3	02			1	2	16
	2-1-5	01			1	2	17
	2-1-5	02			1	2	17
2CO6	1-1-1	T1		2CO6	1	1	1
	1-1-2c	T1			1	1	2
	1-1-2d	T1			1	1	2
	1-1-2e	T1			1	1	2
	1-1-2f	T1			1	1	2
	1-1-3	T1			1	1	3
	1-1-3	T2			1	1	3
	1-1-4	T1			1	1	4
	1-1-4	T2			1	1	4
	1-1-5	T1			1	1	5
	1-2-1c	T1			1	1	2
	1-2-1c	T2			1	1	2
	1-2-1d	T1			1	1	2
	1-2-1d	T2			1	1	2
	1-2-1d	T1			1	1	2

TORPEDOMAN TRAINING

EXERCISE CONTROLLER GUIDE

1 JUNE 1996

PUBLISHED BY COMMANDER, NAVAL EDUCATION AND TRAINING COMMAND,
LEARNING AND DEVELOPMENT DIVISION (N7)

A-10-20

FOR TRAINING USE ONLY

LIST OF EFFECTIVE PAGES

Page No.	Change in Effect	Page No.	Change in Effect	Page No.	Change in Effect	Page No.	Change in Effect
Title Page	Change 5	(1), (2)	Change 3				
ii	Change 5	(3) thru (6)	Change 5				
Letter of Promulgation	Original	(7)	Change 3				
iv thru vi	Change 3						
vii thru xii	Change 5						
1 thru 4	Change 3						
5, 6	Change 5						
7	Change 3						
8	Change 5						
W2CO2-1	Change 3						
W2CO2-3	Change 5						
W2CO1-1	Change 3						
W2CO2-2	Change 3						

HAZARD AWARENESS NOTICE

All personnel involved in operation or maintenance of electronic equipment must be thoroughly familiar with the electronic equipment safety precautions contained in Electronic Installation and Maintenance Book NAVSEA 0967-LP-000-0100, Section 3, and NSTM, Electronics, Chapter 400, NAVSEA S9086-ND-STM-000/CH 400, Section 2. In addition, attention is directed to the Accident Prevention Manual, OPNAVINST 5101.2 (series), and Safety procedures for Conducting training in arduous or potentially high-risk activities, NETC 5100.1 (series).

This equipment employs voltages which are dangerous and may be fatal if contacted by operating or maintenance personnel. Extreme caution must be exercised when working with this equipment. Hazard awareness dictates that this equipment must always be viewed as integral part of a system and not as a component. While every practical precaution has been incorporated into this equipment, it is not possible or practical to try to list every condition or hazard that you may encounter. Therefore, all operating or maintenance personnel must at all times observe as a minimum, the following:

DON'T SERVICE OR ADJUST ALONE

Under no circumstances will a person operate or maintain equipment without the immediate presence or assistance of another person capable of rendering aid. Unless under direct supervision of a qualified person, no person shall operate or maintain equipment for which he is not qualified.

HAZARD AWARENESS NOTICE (Continued)

DON'T TAMPER WITH INTERLOCKS

Reliance on interlock circuits to remove power from the equipment is never to be assumed. Until operation of the interlock is verified, equipment is assumed to be in the hazardous mode of operation. Under no circumstances will any access gate, door, or interlock switch be removed, bypassed, or modified in any way by other than authorized maintenance personnel and then only after observing proper tag-out procedures.

REPORT ALL HAZARDS

If at any time you detect a hazard, it is your responsibility to report the hazard to ensure that it is corrected. If at any time you detect a "new" or "suspected new" hazard, particularly due to equipment installation modification or repair, it is your responsibility to ensure that a SAFETYGRAM is submitted to the Naval Safety Center, Norfolk, VA, in accordance with OPNAVINST 5102.1 (series). This will ensure that this hazard will be investigated, publicized, or corrected as required.

SAFETY SUMMARY

The following paragraphs summarize, for the benefit of the Weapons Department and qualified launcher personnel, the safety rules and general safety precautions for the operation of pyrotechnics, countermeasures, evasion devices, and their launcher systems. Familiarity with and adherence to the applicable safety rules and safety precautions are mandatory for all personnel involved in the operation and maintenance of the system. Specific safety precautions are contained in the checklists and operating procedures, as appropriate.

HAZARD AWARENESS NOTICE (Continued)

1. SAFETY STANDARDS

The following safety standards apply to all phases of operations involving the devices and their launcher systems. The controls and rules are designed to provide positive measures to:

a. Ensure that a launched device is precluded from striking the firing ship.

b. Prevent an inadvertent/accidental launching.

c. Ensure the disposition, handling, launching, and aborting operations of the device launcher system will be such as to minimize the risk of injury to personnel and or equipment.

2. MK 48 SAFETY PRECAUTIONS

a. Explosive Precautions

(1) These units contain high explosives. Do not strike or drop high explosive components. No sparks, open flames, or other sources of ignition are to be present when working with high explosives.

(2) The arming device contains an explosive charge and must be handled with care. The explosive charge is relatively insensitive, but the arming device should not be subjected to physical shocks or unnecessary handling.

(3) The warhead contains high explosives. Observe all precautions for handling explosives. An armed exploder must NOT be removed from the torpedo. If the exploder is armed, it must be removed by EOD personnel only. (Refer to NWP-72-1.)

HAZARD AWARENESS NOTICE (Continued)

(4) If the exploder tube feeler index is not in the SAFE position and flush with the exploder head, rotate the Manual Safety Switch to the RECOVER position and notify EOD personnel.

(5) A safety screw can be installed in the exploder only if the tube feeler is in the SAFE position. If the safety screw is not available or cannot be installed, reject the exploder.

b. OTTO FUEL PRECAUTIONS

(1) For any OTTO fuel detector reading in excess of 0.2 ppm, OTTO fuel spill procedures must be implemented.

(2) Food, drink, and tobacco are not permitted in OTTO fuel spill areas.

(3) Organic cartridge respirators or oxygen breathing apparatus are not to be used in combating OTTO fuel-associated casualties, including cleanup of spills or combustion by-products.

(4) A minimum of two people will be present during operations involving OTTO fuel.

(5) OTTO fuel, a monopropellant, has a flash point of 265 degree F and does not require oxygen to sustain ignition.

(6) (MK 48) Exhaust gases from a HOT RUN MK 48 are extremely toxic and constitute personnel hazards by inhalation, ingestion, and skin absorption.

c. ADDITIONAL MK 48 SAFETY PRECAUTIONS

HAZARD AWARENESS NOTICE (Continued)

(1) Mechanical Precautions. To preclude the possibility of the torpedo engine lubricating oil draining out of the sump, the MK 48 torpedo shall not be rotated in excess of 90 degrees, except for defueling.

(2) Operating Precautions. Under no circumstances will fire control transmission checks be conducted on a MK 48 torpedo outside the torpedo tube.

3. HANDLING PRECAUTIONS

a. Handling equipment shall never be loaded to its maximum rated capacity and must be inspected prior to use.

b. Hooks used in handling procedures must have safety latches or be moused.

c. Do not allow weapon to be unrestrained, in any direction, at any time.

d. At no time will a device be unloaded through the breech without specific permission of the commanding officer.

4. ELECTRICAL PRECAUTIONS

a. Personnel must be grounded immediately prior to touching an electrical connector or wire connected to the weapon. Personnel must momentarily ground themselves by making bare skin-to-metal contact with the weapon.

HAZARD AWARENESS NOTICE (Continued)

b. Personnel working with or near high voltages should be familiar with the methods of artificial respiration.

c. Inspect all electrical connectors for bent pins and other physical damages. Always engage and disengage electrical connectors by holding the connector, never the wire.

d. Operating personnel observe all safety regulations. Do not replace components or make adjustments inside the equipment with the high-voltage supply turned on. Under certain conditions, dangerous potentials may exist when the power control is in the OFF position, due to charges retained by capacitors. To avoid casualties, always remove power and discharge and ground a circuit before touching it.

e. Under no circumstances should any person reach into or enter the enclosure for the purpose of servicing or adjusting the equipment, except in the presence of someone who is capable of rendering aid.

5. HIGH PRESSURE AIR PRECAUTIONS

a. Pressurized air leaks produce a jet of high velocity air, which normally cannot be seen. Care must be taken to avoid the path of one of these jets. Exposing any part of the body to high velocity air can cause serious bodily injury.

b. Do not stand in the way of relief valve or bleed discharge ports. Exposing any part of the body to high velocity air can cause serious bodily injury.

HAZARD AWARENESS NOTICE (Continued)

c. Open all HP air valves slowly whenever the differential pressure across the valve exceeds 200 psig. Avoid a pressurization rate in excess of 200 psig per minute to prevent the possibility of compression ignition or a shock wave that could rapture a pipe or fitting.

6. TOXIC MATERIAL PRECAUTIONS

a. Vapors of most cleaning agents are toxic if inhaled in large quantities for extended periods. Use toxic cleaning agents sparingly and in well-ventilated areas. Be sure that cleaning agent containers are kept closed, except when actually in use. Wash hands thoroughly with soap and warm water after using cleaning agents.

b. Use flammable cleaning agents and paints sparingly and only in well-ventilated areas. Be sure no sparks, open flames, or other source of ignition are present when materials, which are flammable, are being used.

7. GENERAL GUIDANCE. Use of personnel listed in personnel tables is not required, unless so indicated. The combined tasks of Supervisor, Reader, Tool Handler, and Workers may be performed by a minimum of two personnel, providing procedures are performed properly and the Reader/Worker Routine will be enforced when applicable. Upon completion of an evolution, complete work-log/form entries as required by the Type Commander.

8. WARNINGS. The following WARNINGS are repeated from the technical documentation for protection of personnel.

HAZARD AWARENESS NOTICE (Continued)

WARNING

ALL HOOKS WITHOUT SAFETY LATCHES MUST BE MOUSED.

WARNING

WEAPON MUST BE RESTRAINED AT ALL TIMES.

WARNING

VERIFY OTTO FUEL DETECTOR IS RUNNING FOR THIS OP (OP1.20)

WARNING

THE MK 15 OTTO FUEL DETECTOR SHALL OPERATE CONTINUOUSLY DURING ALL MK 48 TORPEDO HANDLING EVOLUTIONS.

HAZARD AWARENESS NOTICE (Continued)

WARNING

IF THE PRESENCE OF OTTO FUEL IS DETECTED, DISCONTINUE EVOLUTION.

WARNING

WHEN OPERATING RAMMER, VERIFY ALL PERSONNEL ARE CLEAR OF AREA AND ARE AWARE RAMMER IS IN MOTION.

TABLE OF CONTENTS

Section	Page
FRONT MATTER	
Title Page	i
List of Effective Pages	ii
Letter of Promulgation	iii
Change Record	iv
Hazard Awareness Notice	v
Table of Contents	xii
INTRODUCTION	
1. Introduction to Training System	1
1-1. Training System overview	1
1-2. Training System discussion	1
1-2.1 Torpedo Tube Lab	1
1-2.2 Discussion	1
2. EXERCISE SECTION	
2-1. Background	2
2-2. Discussion	2
2-2.1 Exercise Selection by Index	2
3. LOCALLY PREPARED EXERCISE	
3-1 Background	3
3-2 Discussion	3
3-3 Exercise Developement	3
3-3.1 Exercise SET-UP	4
3-3.2 Exercise Scenario	4
3-3.3 Exercise Events	4
3-3.4 Exercise Submittal	5
4. OPERATIONAL TRAINER SAFETY	
4-1 Safety Discussion	5
4-1.1 Trainer Safety Guidelines	5
Exercise Selection Guide	8
REFENENCE MATERIAL LIST	
MASTER MATERIAL LIST	(1)
PROFILE ITEM TO EXERCISE OBJECTIVE ASSIGNMENT CHART	(6)
BLANK ECG FORMS	(7)

INTRODUCTION

1. INTRODUCTION TO TRAINING SYSTEM

1-1 THE FUNCTIONAL OBJECTIVE OF THE TORPEDOMAN

Team Trainer is to provide refresher training in Normal, and Casualty Operations, During Battlestations Torpedo and Battlestations Missile.

The purpose of this training is to refine and integrate individual Team Member performance into a concerted performance. This is accomplished by emphasizing previously acquired individual Skills/ Knowledge, interteam communication. Recognition of Emergency situations that threaten the ships ability to defend itself.

1-2 TRAINING SYSTEM DISCUSSION

The Training System for the Torpedoman Team Trainer consists of (1) Torpedo Tube Lab, (2) MK 48s, MK 70 Moss System, IG, PG, and ECG. The following paragraphs describe capabilities and limitations of the Torpedo Tube Lab. Summarizes ECG composition, organization, use, maintenance, and describes associated training matter duties.

1-2.1 TORPEDO TUBE LAB

The purpose of the Torpedo Tube trainer is to provide a simulated Torpedo environment in which Battlestations can be conducted.

Intended use is to refresh Reload Party and Torpedoman on procedures and working as a team. Recognition of Casualties, Communications, and decision making.

1-2.2 DISCUSSION

To achieve optimum training and evaluation of the Torpedomen and Reload Party. The training simulates actual operation and equipment necessary in developing, and refining Reload in torpedo tube casualty skills.

The Trainer consists of the following Major Areas:

a. Torpedo Tube
b. Handling Platform
c. Classroom

1-2.2 (con't)

The Instructor Panel in the training area enables the Instructor to control problem fault modules and monitor operations.

2. EXERCISE SECTION

2-1 BACKGROUND

This section presents a procedure for selection of Training Exercise contained in this volume. the Exercise Selection Index provides a matrix of training considerations within a specific Exercise.

2.2 DISCUSSION

The details regarding the specific procedures for Exercise Selection are as follows:

2-2.1 EXERCISE SELECTION BY INDEX

Exercise Selection utilizing the Index is the method for selecting the exercise for a training session. With the Index criteria presented, specific Indexing criteria follow with a brief explanation of each Indexing criterion:

a. The exercise Objective specifies the detailed purpose of the particular Exercise with regards to the Torpedo Team Trainer proficiency.

b. The Exercise Scenario column provides synopsis of conditions under which the Exercise is to be performed.

c. The System/Subsystem configuration column specifies the equipment line-up readiness condition or mode of operation required to conduct the exercise.

d. Exercise Length is a guideline only, safety procedures are of utmost concern and Exercise Length is variable.

e. The Training Level (TOS) column specifies the TOS for each Exercise.

f. The Difficulty Index indicates the degree of exercise difficulty relative to the appropriate TOS. It is helpful in selecting exercises appropriate to the proficiency of the Torpedo Room Team Members.

3. LOCALLY PREPARED EXERCISE

3-1 BACKGROUND

This section presents procedures for local development of the training exercises. This volume provides a cross section of training exercises ready for immediate use within the Training Plan. Optimal use of training system may result in the need for additional materials beyond the limit number of training exercises provided. A portion of this need can be resolved through local training exercise development. This will accomplish two functions: tailor exercises to specific training requirements, and increase the initial exercise library.

3-2 DISCUSSION

Locally prepared exercise should make a significant contribution to the effectiveness of the Torpedo Team training and extend the versatility of the training system. Exercise must be carefully developed by using an organized approach based on a structure to achieve training. The exercise presented involves extensive developmental and background efforts.

The component parts with exercises are:

a. Exercise objectives.
b. Set-up Requirements.
c. Exercise Scenario and Tactical Background.
d. Exercise Events.

An overall consideration which determines these components are used with an exercise, and where training should be emphasized, is the training approach. This relationship between the training approach and the component parts of an exercise will be defined in the paragraph following. For uniformity, it is highly recommended that the format of exercises in this ECG be used for locally prepared exercises.

3-3 EXERCISE DEVELOPMENT

The following guidelines for specific exercises development explain the training approach concept and its role in developing the components within the exercise.

INTRODUCTION (CONTINUED)

3-3 (con't)

For each exercise, a training approach must be defined which tells the Instructor exactly how he will administer the exercise. The exercise objective must be determined coincident with the selection of a training approach. The exercise objective defines the well as the object of the training. Exactly what training as to be accomplished must be defined. It is not advisable to include other training aspects within the same training, but to concentrate the objective to the need.

3-3.1 EXERCISE SET-UP

Once the training approach and the exercise objective have been defined, the actual exercise set-up must be developed. this includes such consideration as:

a. Exercise length - Expected time to accomplish the objective
b. Own ship limitations
c. Student expertise

3-3.2 EXERCISE SCENARIO

The tactical situation and environment provides the setting in which the training will occur, and must complement the exercise objective. In establishing the exercise environment, it must be kept in mind how the actual external environment (depth, Speed, Trim) is expected to affect the training, and what limits should be established for this.

Exercise Scenario should include:

a. Assumed OpArea or location.

b. Assumed ship operation or evolution

3-3.3 EXERCISE EVENTS

The exercise events are the logical step-by-step method by which the exercise presents the training problem to the operators. They include:

a. Precomex events which are normally for briefing the operators on the assumed tactical situation versus the training problem, setting up equipment and trainer inputs, and performing items such as placing damage control gear in the trainer.

3-3.3 (con't)

b. Comex is a point in the exercise at which the trainer function is started and target injection occurs.

c. Training Events are the principal events required to accomplish the intended training. The specific number of events is based on the requirements of the objectives.

d. Finex is when the trainer is secured, and no further exercises occur.

e. Review occurs upon completion of the training section. The specifics of this review are a function of the Training approach for the particular exercise.

Generally, the instructor may review what training was considered important, how it was or was not achieved, and the approach to correct less-then-effective areas of operation. A question and answer period may also occur at this time.

3-3.4 EXERCISE SUBMITTAL

When developing exercises specific to individual training devices, include trainer type in requirements section of the Exercise Title Sheet. submit proposed Exercise to Course Curriculum model Manager for approval and issue of Interim Change to incorporate. All Interim Changes will be included in the next Change or Revision.

4. OPERATIONAL TRAINER SAFETY INSTRUCTIONS

4-1 SAFETY DISCUSSION

Safety is the utmost importance in the operation of the training device. Trainees are encouraged to work quickly, but carefully in the trainer to avoid injuries, all trainees will be briefed on trainer safety precautions prior to the training session.

4-1.1 TRAINER SAFETY GUIDELINES

Trainer safety is of the utmost importance, and as such, the following requirements will be adhearded to.

INTRODUCTION (CONTINUED)

4-1.1 (con't)

a. All personnel involved in the operation of the trainer will complete the following.

(1) Know the location of the first aid equipment.

(2) Complete the basic first aid course.

(3) Be qualified to perform cardiopulmonary recitation.

b. All operators will complete a qualification program for the trainer operation.

c. A minimum of one operator will be present for all training sessions.

d. All students attending the 5 day trainer session will complete the course in its entirety.

e. Prior to students training, an orientation brief and walk-through of the trainer will be conducted by the instructor and cover at a minimum, the following:

(1) Drop On Request (DOR)

(2) Training Time Out (TTO)

(3) Location of all first aid equipment.

(4) Casualty plan for injured.

(5) Location of communication equipment.

(6) Location and responsibility of supervisor, operators safety observers.

(7) All safety precautions associated with the handling of hazerdous materials.

f. All students will wear steal-toe shoes during the trainer section.

g. Operators review system line-up checks for all normal and emergency systems necessary to support safe training.

h. Operators review prior to each training section, all actions required in the event of personnel casualty, to include first aid, notification of appropriate supervisors, and personal evacuation methods and routes.

INTRODUCTION (CONTINUED)

i. At the minimum, whenever any of the following conditions exsist, the operator and/or safety observer will terminate the training section until the unsafe conditions are corrected.

EXERCISE SELECTION GUIDE

EXERCISE NUMBER	EXERCISE OBJECTIVES	EXERCISE SCENARIO	SYS/SUB CONFIG.	EXERCISE LENG. (MIN)	TRAIN. LEV. (TOS)	DIFFICULTY INDEX
W2C02-1	PROVIDE TRAINING IN CASUALTY PROCEDURES DURING BATTLESTATION TORPEDO ON MK 48 TORPEDO.	OTTO FUEL LEAK FROM MK 48	N/A	VARIABLE 120 MINS. MAX.	O2	INTERMEDIATE
W2C02-3	PROVIDE TRAINING IN MK-48 HOT RUN CASUALTIES OPERATIONS.	START AT BATTLESTATIONS MISSILE PROCEDURES		VARIABLE 120 MINS. MAX.	O2	AVERAGE
W2C01-1	PROVIDE TRAINING IN TORPEDO TUBE LOADING	START AT BATTLESTATION MISSILE	N/A	VARIABLE 120 MINS. MAX.	O2	AVERAGE
W2C02-2	PROVIDE TRAINING IN TORPEDO A-CABLE REPLACEMENT.	LARGE WARSHIP CLOSING FIRING POINT PROCED-URES.	N/A	VARIABLE 120 MINS. MAX.	C1	AVERAGE

8.

EXERCISE TITLE SHEET

EXERCISE NO. W2C01-1	TITLE: TORPEDO TUBE OPERATIONS	Sheet 1 of 3
OBJECTIVE: TO PROVIDE TORPEDO ROOM TRAINING ON TORPEDO TUBES AND HANDLING		EXERCISE LENGTH: (MIN) 60 MIN TRAINING LEVEL (TOS) 02 DIFFICULTY INDEX AVERAGE

REQUIREMENTS:

1. EQUIPMENT
   a. TORPEDO LAB
   b. Mk 48 w/s
   c. MANUAL HANDLING EQUIPMENT

APPROACH:

TO PROVIDE HANDS ON TORPEDO TUBE AND MANUAL HANDLING PROCEDURES

SPECIAL INSTRUCTIONS:

MONITOR SAFETY DURING MANUAL LOADING PROCEDURES. SPECIAL ATTENTION SMOOTHNESS OF GRIP HOIST OPERATIONS.

EXERCISE TITLE SHEET

EXERCISE NO. W2C01-1	TITLE: TORPEDO TUBE OPERATIONS		Sheet 2 of 3
TIME	EVENT	CONTROLLER ACTIVITY	OPERATOR ACTIVITY
PRECOMEX	1. TORPEDO LAB SET-UP	1. TORPEDO TUBE LAB READY FOR OPERATION AS PER OPERATING INSTRUCTIONS.	1. READ SAFETY SUMMARY
PRECOMEX	2. SCENERIO BACKGROUND	2. BRIEF TEAM SHIP AT ALERT BATTLESTATION MISSLE . TONALS IN THE WATER.	2. TEAM IN THE CLASSROOM
PERCOMEX	3. SCENERIO SET-UP	3. TMD IN TORPEDO TUBE # 1. TT# 1 AND 2 READY IN ALL RESPECTS. STATION UNDER-WAY WATCH 1,2,OR 3.	3. TMOW MANNED ALL BOOKS IN LAB AND TOOLS SET-UP FOR UNDERWAY.
T+0	4. BATTLESTATIONS MISSLE	4. MAN BATTLESTATION MISSLE. TONALS IN THE WATER.	4. TORPEDO RELOAD PARTY STANDING BY. TT# 1 AND 2 READY.
T+5	5. FIRING POINT PRECEDURES	5. WARM UP POWER FIRING POINT PRECEDURES	5. TORPEDO ROOM READY
T+10	6. LAUNCH TT# 2	6. LAUNCH TT# 2. TORPEDO IN THE WATER.	6. ROOM SUPERIVISOR: DIRECTS RIGGING OF THE TORPEDO ROOM.
T+15	7. TORPEDO IMPACT	7. TORPEDO IMPACT. LOSS OF HYD. LAUNCH TT# 1 (SECURE HYD. SUPPLY AS PER VALVE LINE-UP INSTRUCTION.	7. ROOM SUPERIVISOR ACTIONS RECOGN-OF LOSS OF HYDS. AND RECOMMENDA-TIONS.

EXERCISE TITLE SHEET

EXERCISE NO. W2C01-1	TITLE: TORPEDO TUBE OPERATIONS		Sheet 3 of 3
TIME	EVENT	CONTROLLER ACTIVITY	OPERATOR ACTIVITY
T+20	8. RELOAD	8. RELOAD TT# 1.	8. TORPEDO RELOADS ABILITY TO RELOAD WITHOUT HYDS.
T+25	9. DISTANT EXPLOSION	9. DISTANT EXPLOSION HULL BREAK-UP.	9. NO ACTION.
FINEX	10.FINEX	10. UPON COMPLETION OF MANUAL TUBE LOADING. SECURE SCENERIO RESTOW ROOM AND CRITIQUE SCENERIO.	10. RELOAD PARTY RESTOW TORPEDO LAB.

EXERCISE TITLE SHEET

EXERCISE NO. W2CO2-1	TITLE: MK 48 CASUALTY OPERATIONS	Sheet 1 of 4
OBJECTIVE: TO PROVIDE TRAINING IN RECOGNITION OF MK 48 OTTO FUEL SPILL AND CLEAN-UP PROCEDURES		EXERCISE LENGTH: (MIN) 60 MIN TRAINING LEVEL (TOS) 02 DIFFICULTY INDEX INTERMEDIATE

REQUIREMENTS:	APPROACH:
1. EQUIPMENT a. TORPEDO TUBE LAB b. Mk 48 EXERCISE (OTTO FUEL SPILL TRAINER)	PROVIDE STUDENTS WITH BATTLESTATION PROCEDURES, VARIOUS TORPEDO TUBE AND HANDLING EVOLUTIONS. TO CONCLUDE WITH OTTO FUEL II SPILL. SPECIAL INSTRUCTIONS: Monitor phone communications to control, and Face To Face communications. Concentrate on Procedurel Compliance/Familiarity.

EXERCISE TITLE SHEET

EXERCISE NO. W2C02-1	TITLE: MK 48 CASUALTY OPERATIONS	Sheet 2 of 4

TIME	EVENT	CONTROLLER ACTIVITY	OPERATOR ACTIVITY
PRECOMEX	1. TORPEDO TUBE LAB SET-UP	1. TORPEDO TUBE LAB READY FOR OPERATION AS PER OPERATING PROCEDURES.	1. READ SAFETY SUMMARY
PRECOMEX	2. SCENARIO BACKGROUND	2. BRIEF TORPEDOMEN AND RELOAD PARTY SHIP IS ON ALERT RIGGED FOR ULTRA QUIET. TONALS IN THE WATER.	2. TEAM WILL BE IN THE CLASSROOM.
PERCOMEX	3. SCENARIO SET-UP	3. a. LOAD TMD IN THE TORPEDO TUBE #1 AS PER OD44979 VOL 7. b. SELECT 1,2,OR 3 UNDERWAY TORPEDO RM WATCH TO BE MANNED. c. SUPPLY TMOW WITH INFORMATION FOR TORPEDO ROOM STATUSBOARD.	3. TMOW MANNED AND UP-DATE STATUS-BOARD. SET-UP LAB TO SHIP.

EXERCISE TITLE SHEET

EXERCISE NO. W2C02-1	TITLE: MK 48 CASUALTY OPERATION		Sheet 3 of 4
TIME	EVENT	CONTROLLER ACTIVITY	OPERATOR ACTIVITY
T+0	4. COMEX	4. START EXERCISE AS FOLLOWS: PASS OVER PHONE RIG SHIP FOR ULTRA QUIET,TONALS IN THE WATER.	4. TMOW RIG FOR ULTRA QUIET AND MAKE REPORT.
T+5	5. BATTLESTATIONS	5. TORPEDO IN WATER, SNAPSHOT TT# 1. MONITOR TMOW ACTIONS FOR TUBE OPERATIONS.	5. TMOW PREPARE TORPEDO TUBE GIVE PROPER TURNOVER TO BATTLESTATION SUPERVISOR.
T+10	6. POSTLAUNCH	6. POSTLAUNCH TT# 1, RELOAD TT# 1 WITH MK 48 TORPEDO. MONITOR POSTLAUNCH PROCEDURES.	6. STBD. TORPEDO RELOAD PARTY POSTLAUNCH AND RELOAD TT#1.

EXERCISE TITLE SHEET

EXERCISE NO. W2C02-1	TITLE: MK 48 CASUALTY OPERATION	Sheet 4 of 4

TIME	EVENT	CONTROLLER ACTIVITY	OPERATOR ACTIVITY
T+15	7. OTTO FUEL SPILL	7. PASS THE WORD TORPEDO IMPACT, FLOODING IN THE ENGINE RM. a. AT THIS TIME SELECT A SPILL AREA FROM THE MK 48 OTTO FUEL SPILL TRAINER, GIVE COMMAND TO RELOAD TT# 1. CONDUCT OTTO FUEL SPILL DRILL.	7. OBSERVE SUPERVISOR ABILITY TO RUN CASUALTY AND CONTINUE TUBE LOADING PROCEDURES. a. OBSERVE RELOAD PARTY PORT IDENTIFIES PROPER LEAK POINTS, MAJOR OR MINOR SPILL AND OTTO FUEL SPILL PROCEDURES AND IMMEDIATE ACTIONS.
	8. OTTO FUEL SPILL CONTAINMENT AND FINAL CLEAN-UP DECONTAMINATION	8. UPON FINAL CLEAN-UP AND DECON TERMINATE THE DRILL.	8. CLEAN-UP TEAM DIDN'T CONTAMINATE THE REST OF THE BOAT CONTINUED RELOAD TT# 1.
	9. RESTOW	9. DIRECT TRAINEE TO RESTOW LAB AND HANDLING EQUIPMENT, OTTO FUEL SPILL BAG.	9. TRAINEE RESTOW LAB
	10. FINEX	10. FINEX a. BATTLESTATION SUPERVISOR CRITIQUE OVERALL EVALUATION.	10. FINEX- TEAM LEAVES TRAINER AND GOES INTO CLASSROOM FOR CRITIQUE.