NAVAL AVIATION SCHOOLS COMMAND

NAS PENSACOLA, FLORIDA **NAVAVSCOLSCOM-SG-131**

AIRCRAFT ENGINES AND SYSTEMS

JANUARY 2007

DEPARTMENT OF THE NAVY
COMMANDING OFFICER
NAVAL AVIATION SCHOOLS COMMAND
181 CHAMBERS AVE SUITE C
PENSACOLA FL 32508-5221

1542
N3AC
19 Jan 07

NAVAVSCOLSCOM-SG-131

Subj: AIRCRAFT ENGINES AND SYSTEMS STUDENT GUIDE

1. NAVAVSCOLSCOM-SG-131 Aircraft Engines and Systems is issued for information, standardization of instruction, and guidance to instructors and student in Naval Aviation Schools Command (NAVAVSCOLSCOM), as well as for reference during Naval Aviation Training Commands.

2. This publication will be used to supplement the Preflight Syllabus (Course Identification Number Q-9B-0020) in the Aviation Training School Department (N3B) of NAVAVSCOLSCOM.

3. Recommendations for changes to any NAVAVSCOLSCOM-SG-131, student guide, shall be submitted to the Commanding Officer, Naval Aviation Schools Command, Code N3A, Learning Management Office(LMO), via the Training Improvement Plan. Point of Contact is in LMO at 850-452-4210 or DSN 922-4210.

4. Questions concerning Preflight academics shall be referred to NAVAVSCOLSCOM Code N3B1, Preflight Director, 850-452-5557, DSN 922-5557.

5. NAVAVSCOLSCOM-SG-131 replaces CNATRA P-201 (Rev 04-01) under the realignment of NAVAVSCOLSCOM under Commander, Center for Naval Aviation Technical Training.

S. H. KIRBY

Distribution:
CNATT (1)
CNATRA (1)

STUDENT GUIDE

FOR

PREFLIGHT

Q-9B-0020

UNIT 3

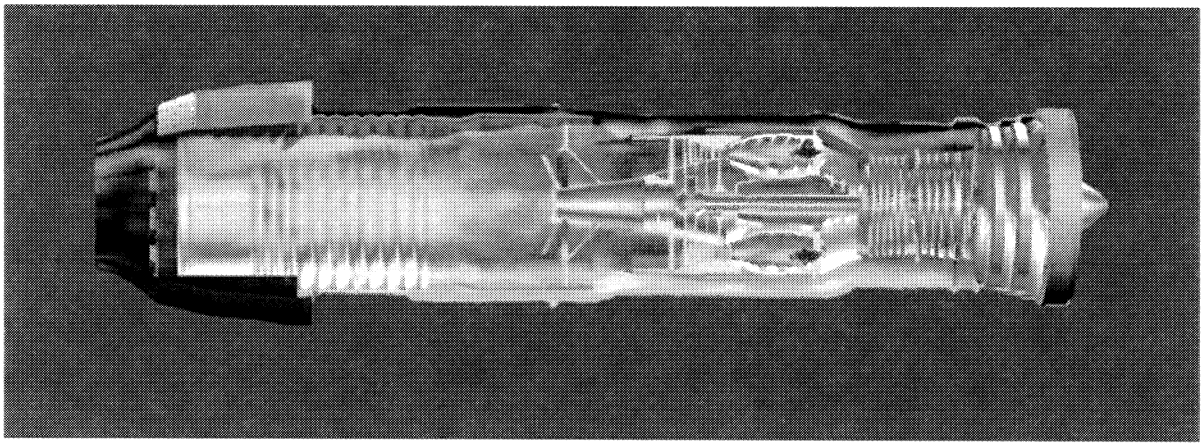

Aircraft Engines And Systems

Prepared by
NAVAL AVIATION SCHOOLS COMMAND
181 CHAMBERS AVE SUITE C
PENSACOLA, FL 32508-5221

Prepared for
CENTER FOR NAVAL AVIATION TECHNICAL TRAINING
230 Chevalier Field Ave Suite C
Pensacola, FL 32508

January 2007

CHANGE RECORD

Number	Description of Change	Entered by	Date

TABLE OF CONTENTS

Change Record 2
Table of Contents 3
Safety Notice 5
How to Use This Student Guide 6
Class Schedule 7

UNIT 3 Fundamentals of Engines

Lesson Topic 3.1 Principles of Gas Turbine Operation
Assignment Sheet 3.1-1
Information Sheet 3.1-3

Lesson Topic 3.2 Gas Turbine Engines
Assignment Sheet 3.2-1
Information Sheet 3.2-3

Lesson Topic 3.3 Compressor Stalls
Assignment Sheet 3.3-1
Information Sheet 3.3-3

Lesson Topic 3.4 Turbojet and Turbofan Engines
Assignment Sheet 3.4-1
Information Sheet 3.4-3

Lesson Topic 3.5 Turboprop and Turboshaft Engines
Assignment Sheet 3.5-1
Information Sheet 3.5-3

Lesson Topic 3.6 Hydraulic Systems
Assignment Sheet 3.6-1
Information Sheet 3.6-2

Lesson Topic 3.7 Electrical Systems
Assignment Sheet 3.7-1
Information Sheet 3.7-2

Lesson Topic 3.8 Fuel Systems
Assignment Sheet 3.8-1
Information Sheet 3.8-2

Lesson Topic 3.9 Lubrication Systems
Assignment Sheet 3.9-1
Information Sheet 3.9-2

Lesson Topic 3.10 Accessory, Starter, and Ignition Systems
Assignment Sheet 3.10-1
Information Sheet.....3.10-2
Appendix 1.A Answers to Study Questions..... 3.A-1

SECURITY AWARENESS NOTICE

This course does not contain any classified material.

SAFETY NOTICE

All personnel must be reminded that personal injury, death or equipment damage can result from carelessness, failure to comply with approved procedures, or violations of warnings, cautions, and safety regulations.

SAFETY / HAZARD AWARENESS NOTICE

a. Safe training is the number one goal. Each year at training commands, lives are lost and thousands of man hours and millions of dollars are wasted as the result of accidents. Most of these accidents could have been prevented. They are the result of actions performed incorrectly, either knowingly or unknowingly, by people who fail to exercise sufficient foresight, lack the requisite training, knowledge, or motivation, or who fail to recognize and report hazards.

b. A mishap is any unplanned or unexpected event causing personnel injury, occupational illness, death, material loss or damage or an explosion whether damage occurs or not.

c. A near miss or hazardous condition is any situation where if allowed to go unchecked or uncorrected has the potential to cause a mishap.

d. It is the responsibility of all Department of Defense personnel to report all mishaps and near misses. If a mishap, hazardous condition or near miss occurs let your instructor know immediately.

e. Students will report all hazardous conditions and near misses to the command high-risk safety officer via their divisional/departmental high-risk safety officer. Reports can be hand written on the appropriate form. Injuries shall be reported on the appropriate form.

HOW TO USE THIS STUDENT GUIDE

This publication is now in your custody and is for your use while studying the Engineering Unit of your program. You may mark any pages in this book, including information sheets and assignment sheets. When filled in, this guide will become a useful reference. It may not be used during testing.

The course material is divided into lesson topics, covering theoretical and physical principles and operation of gas turbine engines; compressor stalls; turbojet, turbofan, turboprop, and turboshaft engines; hydraulic systems; electrical systems; fuel and lubrication systems; and accessory, starter and ignition systems. The knowledge to be acquired is stated for each topic so that you can check your progress. It is to your advantage to review the learning objectives prior to the class presentation, to better understand the material as it is presented by the instructor.

Assignments in this guide are given for study. The effectiveness of the guide depends upon the conscientious accomplishment of the reading and study assignments.

Written tests will be administered on the material at the end of the unit.

CLASS SCHEDULE

Topic No.	Type	Hours	Topic
3.1	Class	1.0	Principles of Gas Turbine Operation
3.2	Class	2.0	Gas Turbine Engines
3.3	Class	0.5	Compressor Stalls
3.4	Class	0.5	Turbojet and Turbofan Engines
3.5	Class	1.0	Turboprop and Turboshaft Engines
3.6	Class	1.0	Hydraulic Systems
3.7	Class	1.0	Electrical Systems
3.8	Class	1.0	Fuel Systems
3.9	Class	1.0	Lubrication Systems
3.10	Class	1.0	Accessory, Starter, and Ignition Systems
3.1-3.5	Lab	1.0	Engines Tour/Review
3.1-3.10	Exam	1.0	Engines Final Examination
Total Hours		12.0	

(This page intentionally left blank)

ASSIGNMENT SHEET

Principles of Gas Turbine Operation
Assignment Sheet No. 3.1.1A

INTRODUCTION

This assignment will aid the student in understanding the principles of operation for a gas turbine engine.

LESSON TOPIC LEARNING OBJECTIVES

Terminal Objective:
Partially supported by this lesson topic:

3.0 Upon completion of this unit of instruction, the student will demonstrate knowledge of the fundamentals of power plants and associated accessory systems.

Enabling Objectives:
Completely supported by this lesson topic:

3.1 Explain the relationship between static pressure, dynamic pressure and total pressure.

3.2 State Bernoulli's Theorem.

3.3 Describe the behavior of subsonic airflow in a nozzle and diffuser.

3.4 Describe the behavior of supersonic airflow in a nozzle and diffuser.

3.5 Identify the three main sections of a gas generator.

3.6 Describe the Brayton Cycle.

3.7 Describe the basic components and operation of the gas generator.

3.8 Describe how pressure, temperature, and velocity changes through each section of a gas turbine engine.

3.9 Describe gross thrust and net thrust.

3.10 Describe how atmospheric temperature effects thrust in a gas turbine engine.

3.11 Describe how atmospheric pressure effects thrust in a gas turbine engine.

3.12 Describe how altitude effects thrust.
3.13 Describe the effect of airspeed on thrust.

3.14 Describe the effect of ram effect on thrust.

3.15 Identify the cockpit instrument that measures thrust in a typical turbojet, turbofan, turboprop, and turboshaft.

STUDY ASSIGNMENT

Review Information Sheet 3.1.1I and answer the Study Questions.

INFORMATION SHEET

Principles of Gas Turbine Operation
Information Sheet No. 3.1.1I

INTRODUCTION

In this course, we'll be discussing the basic engine designs used in military aircraft. Since many flight students do not possess a technical (much less an engineering) background, this book will provide a simple overview of aircraft engines and their associated systems. It is beyond the scope of this course to adequately explain all the nuances of engine system designs.

This chapter introduces some basic propulsion theory as it relates to the gas turbine engine. It will explain some of the factors that can affect the amount of thrust produced by a gas turbine. Throughout this chapter, a simple turbojet engine will be used to illustrate certain concepts. This is merely to keep the discussion on a basic level. All the concepts presented can be extended to virtually all gas turbine engines.

REFERENCES

1. NAVEDTRA 12300, Aviation Machinist's Mate 3 & 2 TRAMAN, 1991
2. NAVEDTRA 12000, Airman TRAMAN, 1990

INFORMATION

Your studies in aerodynamics defined some basic physics along with the principles of pressure and energy. Understanding these concepts is necessary to follow the changes of pressure and energy as the airflow traverses the gas generator.

PRESSURE

Static pressure is the potential energy of fluid molecules at rest. Again, most engineers along with many other professions refer to static pressure simply as **pressure**. **Dynamic pressure** is the kinetic energy of fluid molecules in motion. It is a measure of the force of the fluid molecules as they move through a system. Velocity, however, is magnitude (speed) with direction. Since the direction of the airflow within an engine is constant, to simplify terminology, engineers often refer to dynamic pressure as **velocity**.

Total pressure is the sum of pressure and velocity. In a closed system, total pressure remains constant.

Total Pressure = Static pressure + Dynamic pressure
Total Pressure = (Pressure) + (Velocity)

As potential and kinetic energy vary inversely within a closed system, the pressure and velocity also vary inversely. Any time one increases, the other will decrease a proportional amount. Additionally, as pressure increases, the airflow potential energy increases; and as velocity increases, the airflow kinetic energy increases.

AIRFLOW

Aircraft vary from hovering helicopters to supersonic fighters and the characteristics of the air entering the engines of these aircraft are vastly different. To comprehend the nature of certain design features of gas turbine engines, these variations in the characteristics of the airflow must be understood.

Although air is compressible, the flow of air (the movement of air) at subsonic airspeeds can be treated as a relatively incompressible fluid (This is best described by the Continuity Equation which was introduced in aero). Due to this incompressibility, subsonic airflow will act according to Bernoulli's Theorem**.** **Bernoulli's theorem** states that as any incompressible fluid passes through a convergent opening its velocity increases and pressure decreases. Figure 3.1-1b illustrates the change in pressure and velocity of airflow as it passes through a convergent opening. Conversely, as a subsonic fluid passes through a divergent opening the velocity will decrease and pressure will increase. Figure 3.1-2a illustrates the passage of subsonic airflow through a divergent opening.

At supersonic airspeeds, the airflow has an opposite effect when encountering convergent or divergent openings. As airflow approaches/reaches supersonic speeds, the airflow becomes more compressible. Since the airflow is compressible, it doesn't follow Bernoulli's Theorem but actually acts opposite to it. Therefore, when supersonic airflow passes through a convergent opening, the velocity decreases and the pressure increases (Figure 3.1-2b). Conversely, when supersonic airflow encounters a divergent opening, its velocity will increase and its pressure will decrease (Figure 3.1-1a).

Whenever airflow passes through a convergent or a divergent shape, velocity and pressure will increase or decrease depending if the airflow is supersonic or subsonic. In either case, the total pressure remains the same. If the shape of the opening increases the airflow's velocity and decreases the airflow's pressure, it is a **nozzle.** When the pressure is increased and velocity is decreased, the opening is a **diffuser**. Therefore, a subsonic nozzle is convergent and a supersonic nozzle is divergent; while a subsonic diffuser is divergent and a supersonic diffuser is convergent.

Divergent Passages

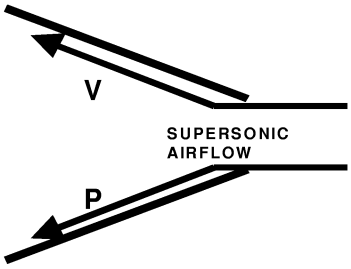

Figure 3.1-1a Supersonic Nozzle

Convergent Passages

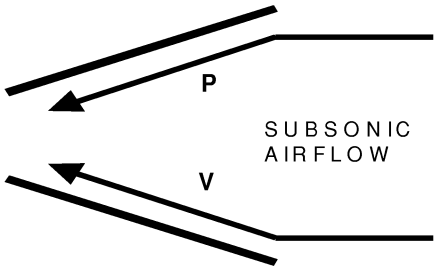

Figure 3.1-1b Subsonic Nozzle

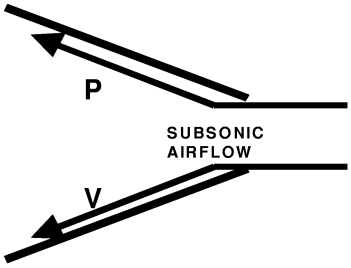

Figure 3.1-2a Subsonic Diffuser

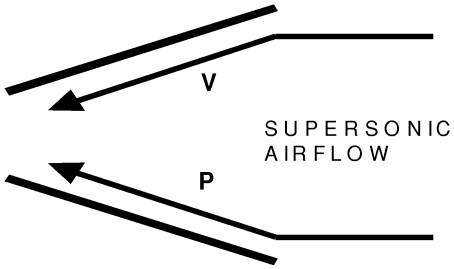

Figure 3.1-2b Supersonic Diffuser

GAS GENERATOR

A **gas generator** produces the high-energy airflow necessary for creating thrust. On all gas turbine engines it will minimally include the compressor, combustion chamber, and turbine (Figure 3.1-3). Additionally, on a turbofan, turboprop and turboshaft, it will include their respective fan, propeller or rotor blades. Each of these components plays a vital role in the production of thrust.

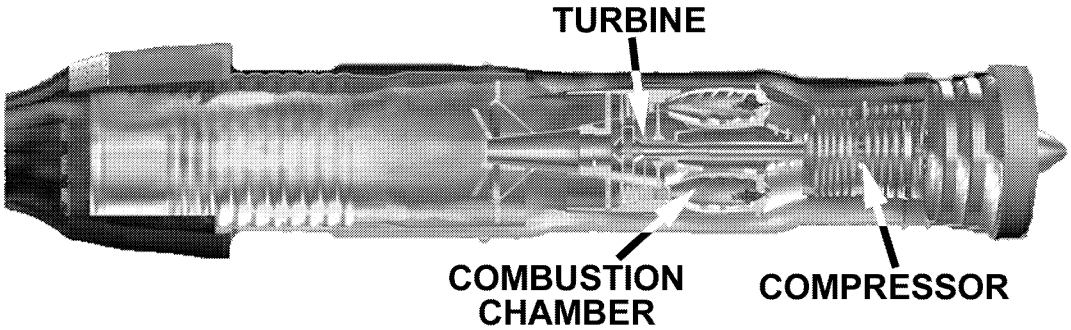

Figure 3.1-3 Gas Generator

THE BRAYTON CYCLE

A gas turbine engine follows a cycle of operation known as the Brayton Cycle (Figure 3.1-4). This operating cycle consists of four events which occur simultaneously: intake, compression, combustion and exhaust. It is important to note that this cycle of operation is different than the operating cycle of a reciprocating engine.

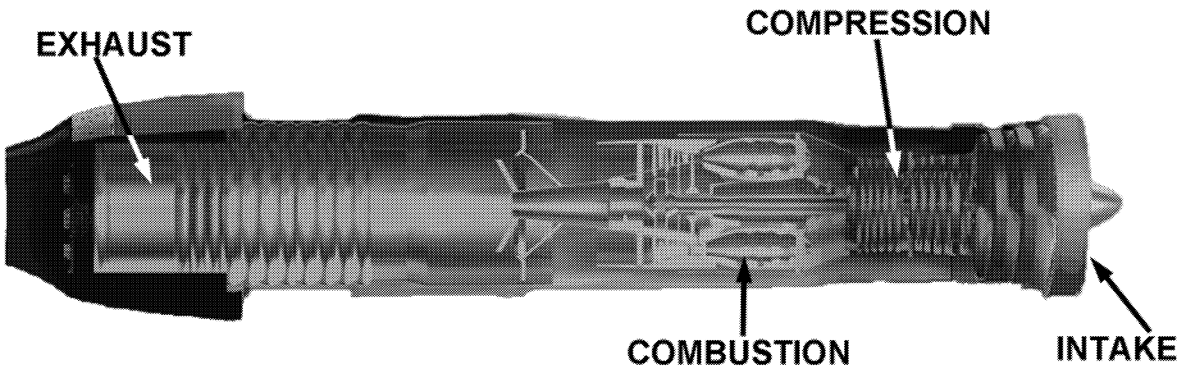

Figure 3.1-4 Brayton Cycle

A reciprocating engine's cycle, like that of an automobile, is called the Otto cycle (Figure 3.1-5). While the events in the Brayton cycle and Otto cycle are similar, the events in the Otto cycle occur sequentially rather than simultaneously. In addition, the events in the Otto cycle will generally take place within a single piston, while the Brayton cycle takes place throughout the gas turbine engine (Figure 3.1-5).

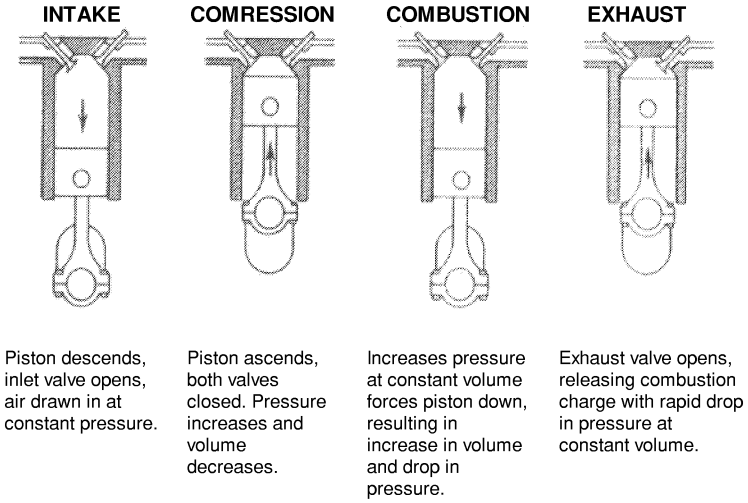

Figure 3.1-5 Otto Cycle

THRUST

Thrust that a gas turbine engine develops is essentially the result of many pressure, temperature and velocity changes as airflow passes through an engine. Figure 3.1-6 is a graphical representation of what will typically happen to these properties of airflow within a turbojet engine. The concepts behind thrust production with a turbojet engine will be easily applied to other gas turbine engines.

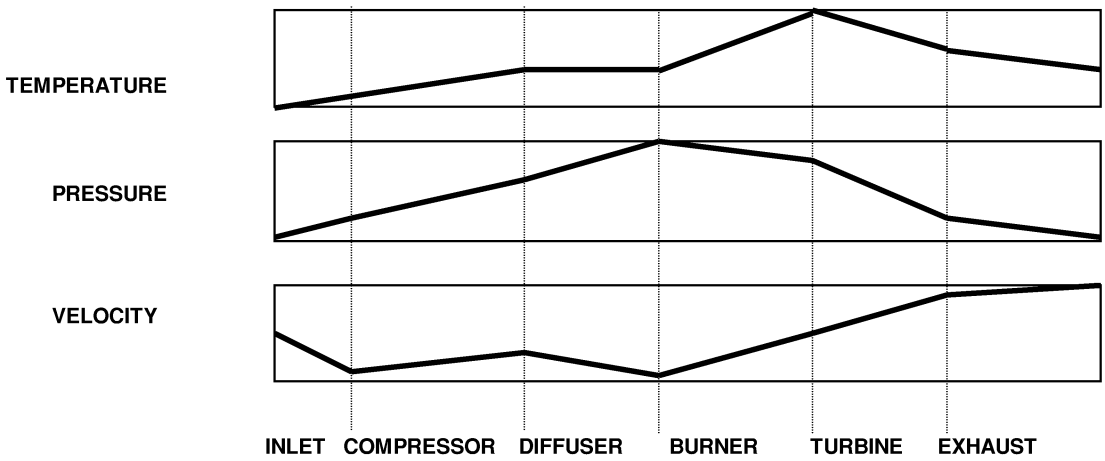

Figure 3.1-6 Temperature / Pressure / Velocity

Gross thrust is a measurement of thrust due solely from the velocity of the exhaust gases. Gross thrust (Figure 3.1-7) will be produced by a stationary engine; perhaps while mounted on a test stand, or on an aircraft while completing a 'ground run-up'. This measurement ignores the velocity of the air at the inlet. In addition, the test must have standard conditions or parameters that serve as a baseline to ensure consistent measurements. These conditions include atmospheric pressures and temperature. Therefore, engineers or maintenance personnel use standard day (29.92" hg and 15 °C at sea level) as their baseline for measuring gross thrust. When an engine manufacturer provides the thrust rating of an engine, it is typically the amount of gross thrust it produces. It is often used to compare the thrust produced to another.

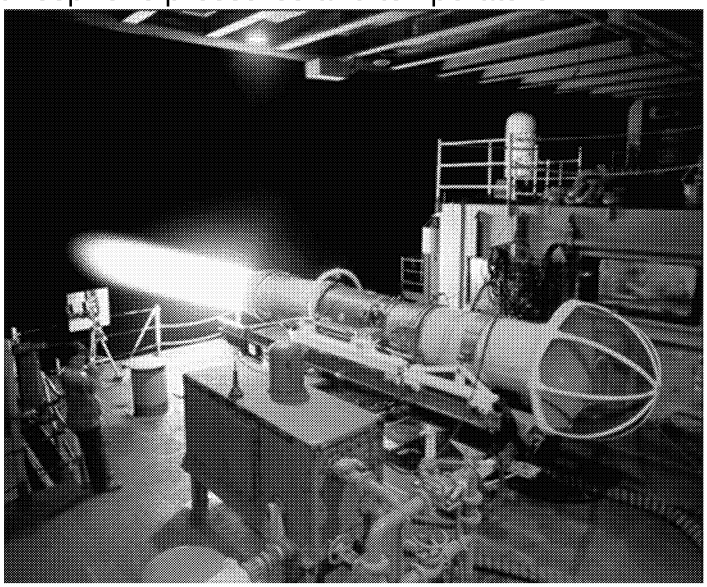

Figure 3.1-7

Under normal flight conditions, an aircraft engine will seldom be stationary. measurement of inlet airflow velocity must be included for the calculation of this thrust. Thrust that corrects for the effect of inlet airflow velocity is known as **net thrust** (Figure 3.1-8). The equation for net thrust is simply the thrust equation:

$$\text{Net Thrust} = m \bullet \frac{V_{final} - V_{initial}}{t}$$

Figure 3.1-8 Net Thrust

Net thrust and gross thrust will be equal when inlet airflow velocity is zero and the atmospheric conditions are standard. Because net thrust is a more realistic measurement of an engine's thrust, the terms thrust and net thrust are often used interchangeably. Therefore, for the remainder of this course, thrust will always be referred to as net thrust.

FACTORS AFFECTING THRUST

The factors that affect the thrust of a gas turbine engine include air density, airspeed/ram effect and engine RPM. The effect of these factors is not restricted to any particular gas turbine engine; although a certain engine may be able to compensate for an effect better than another.

AIR DENSITY

Density is the mass of a substance per unit of its volume. According to the thrust equation, if the mass of airflow increases, thrust will increase. If the density of air increases, mass will increase, and therefore thrust will increase. As an aircraft operates at various altitudes and climates, the ambient air temperature and pressure will vary. These factors will affect the density of the air entering the engine, and as a result, will affect thrust.

As **air temperature** increases, air molecules tend to move apart. This results in a density decrease, and a resultant decrease in thrust (Figure 3.1-9). An engine operating in the warm temperatures near the equator will produce less thrust than an engine operating in the cold of Alaska. Thrust may vary as much as 20 percent from standard rated thrust on a hot or cold day.

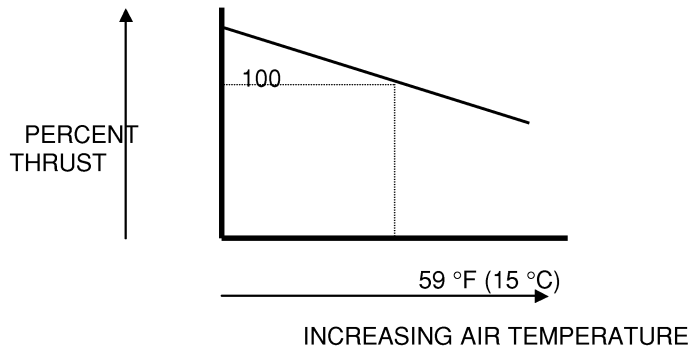

Figure 3.1-9 Temperature Effect on Thrust

As **air pressure** increases, air molecules tend to move closer together. This results in an increase in density, and therefore, thrust increases (Figure 3.1-10). For example, an aircraft that flies through the low-pressure eye of a hurricane will produce less thrust than an aircraft operating at normal ambient pressures.

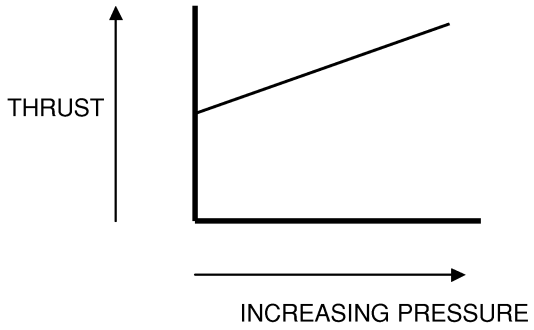

Figure 3.1-10 Pressure Effect on Thrust

ALTITUDE

As an aircraft climbs, pressure and temperature will normally drop. From the previous discussion, thrust will decrease with a pressure decrease, and thrust will increase with a temperature decrease. With an increase in altitude, however, the rate of thrust decreases because a pressure drop is greater than the thrust increase resulting from a temperature drop. This means an engine will produce less thrust as it increases in altitude (Figure 3.1-11).

At approximately 36,000 feet (beginning of the isothermal layer), temperature stabilizes. As a result, temperature will no longer offset the density decrease due to pressure. Therefore, thrust decreases more rapidly. This altitude is also known as the optimum cruise level. At this altitude, thrust available plus low fuel flow and diminished drag combine to provide optimum performance for many engines.

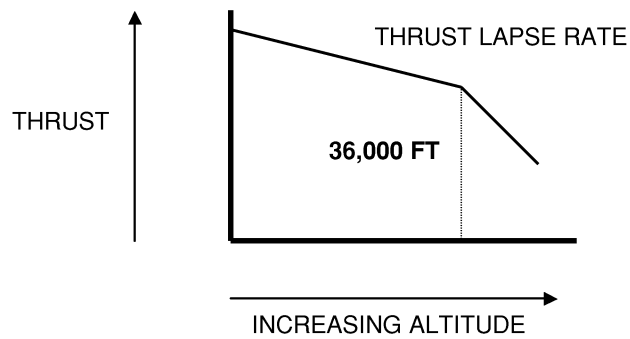

Figure 3.1-11 Altitude Effect on Thrust

AIRSPEED

In the thrust equation, the difference between the inlet and exhaust velocities plays a major role in determining thrust available. As the inlet velocity ($v_{initial}$) approaches the magnitude of the exhaust velocity (v_{final}), thrust is reduced. Therefore, if the mass of air and fuel is held constant, thrust will decrease as airspeed increases (Figure 3.1-12). This decrease in thrust due to an increase in airspeed is theoretical.

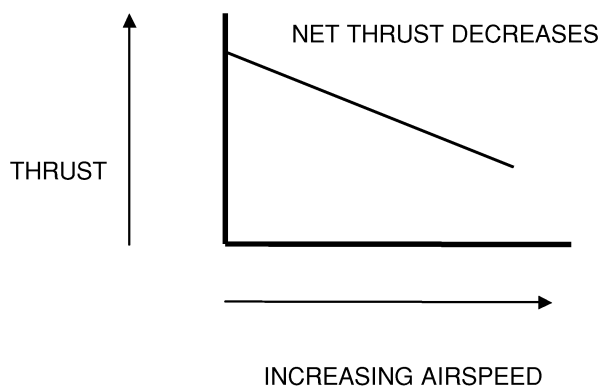

Figure 3.1-12 Airspeed Effect on Thrust

RAM EFFECT

If we only consider the change in airflow velocity in the thrust equation, then thrust decreases with an increase in airspeed. Remember, that the thrust equation consists of two variables: mass (m) and acceleration (v_{final} - $v_{initial}$). As mentioned, the difference between inlet and exhaust velocities decreases as the aircraft increases speed. However, more and more air is being rammed into the inlet, increasing the mass and pressure of inlet air. This offsets the decrease in acceleration and results in a neutral effect or slight increase in thrust at subsonic airspeeds.

This is due to the compressibility of airflow as velocity increases toward supersonic. As airflow becomes compressible, mass due to ram effect increases at an increasing rate. Ram effect is especially important to high performance aircraft due to the exceptionally high-mass airflow that occur at supersonic speeds. This results in a significant increase in overall thrust due to ram effect at supersonic speeds (Figure 3.1-13). For many high-performance fighter aircraft, ram effect allows excellent high altitude performance, although air density is low.

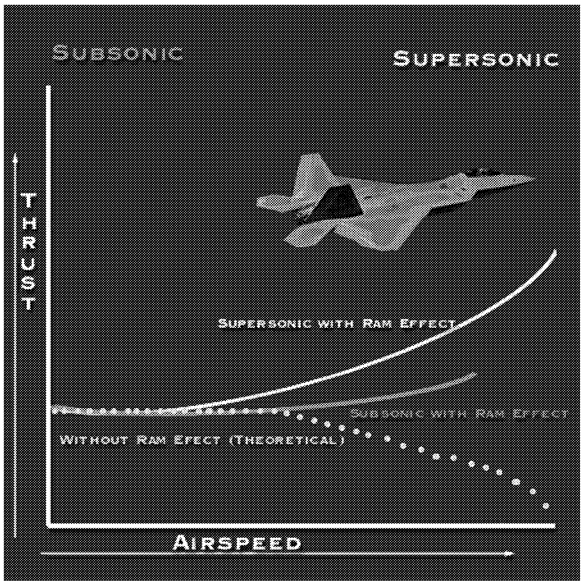

Figure 3.1.13 Ram Effect on Thrust

ENGINE REVOLUTIONS PER MINUTE (RPM)

One of the most obvious factors that affects the thrust output is the rotational speed of the engine. With an increase in RPM, there is an increase in thrust. However, at low RPM there is very little increase in thrust with an increase in throttle. At higher rates of revolution, a small increase in throttle setting will produce a large increase in thrust. At the lower settings, fuel consumption is high for the amount of thrust produced. For this reason, gas turbine engines are normally operated at near their maximum RPM.

THRUST MEASURING INSTRUMENTS

Once a gas turbine engine is installed in an aircraft, the pilot must be able to monitor engine performance and thrust production. Various thrust measurement devices provide the ability to observe engine performance throughout the spectrum of flight conditions. These measurements are translated into an indication on cockpit gauges (Figure 3.1-14) that resemble the standard automobile tachometer or speedometer: circular faces with rotating pointers. Others may have sliding tapes, or even digital readouts.

Figure 3.1-14 Thrust Measuring Instruments

PRESSURE INDICATION GAUGES

For aircraft that rely on the propulsive power of the exhaust gases of a gas turbine engine, such as turbojets and turbofans, use a Engine Pressure Ratio (EPR) gauge (Figure 3.1-15). The EPR gauge indicates the pressure ratio between the inlet and exhaust airflow. The EPR gauge is more widely used because it automatically accounts for some of the airflow variations at the inlet.

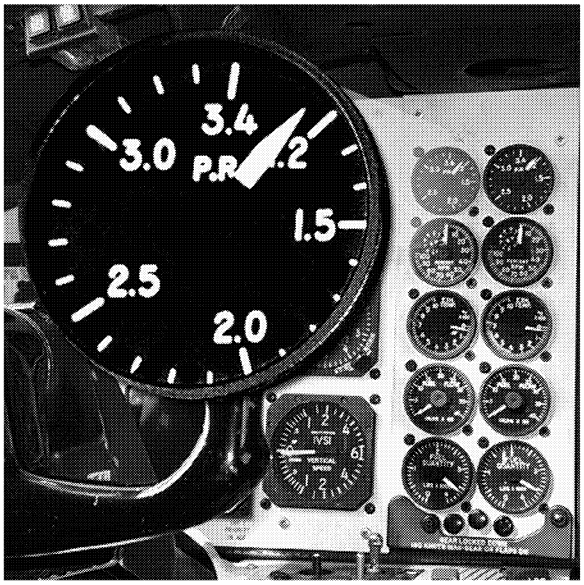

Figure 3.1-15 Pressure Indication Gauges

TORQUEMETER

Propeller or rotor driven aircraft use a torquemeter gauge to indicate power available. The torquemeter gauge (Figure 3.1-16) indicates shaft horsepower available to drive a propeller or rotor. This is where most of the thrust is derived. The thrust produced at the exhaust section of the engine of a propeller or rotor driven aircraft is comparatively small.

Figure 3.1-16 Torquemeter Gauge

TACHOMETER

The gauge most commonly used by a pilot to determine engine performance is the tachometer (Figure 3.1-17). This gauge provides the crew with an indication of engine speed. Although it does not actually measure thrust, this instrument provides the pilot with a quick assessment of the amount of energy being produced by the engine, much like a tachometer in an automobile. Gas turbine engine tachometers are calibrated in percent rpm. On many engines, 100% represents full power. Therefore, using percentages on a tachometer as a comparative basis, the aviator will not be bogged down by the high numbers that would be necessary on an actual RPM indicator.

Figure 3.1-17 Tachometer

STUDY QUESTIONS

Principles of Gas Turbine Operations

1. Describe the relationship between pressure and velocity in a closed system.

2. How does subsonic airflow react through a convergent opening? Divergent opening?

3. How does supersonic airflow react through a convergent opening? Divergent opening?

4. What happens to the airflow as it passes through a nozzle? Diffuser?

5. What are the three sections of a gas turbine engine?

6. How does a gas turbine engine produce thrust?

7. What cycle explains the movement of air through a gas turbine engine?

8. What happens to the velocity of the gases as they pass through the compressor section? the burner section? the turbines?

9. What is gross thrust?

10. What is net thrust?

11. When are gross thrust and net thrust equal?

12. What affects the density of the air mass?

13. What happens to thrust when air density decreases?

14. What happens to thrust when air temperature increases?

15. What happens to thrust when air pressure decreases?

16. What is the relationship between pressure and temperature as altitude increases?

17. What is the optimum cruise altitude and why?

18. How does airspeed and the ram effect change the amount of thrust produced at subsonic and supersonic airspeeds?

(This page intentionally left blank)

ASSIGNMENT SHEET

Gas Turbine Engines
Assignment Sheet No. 3.2.1A

INTRODUCTION

This assignment will aid the student in understanding the construction of gas turbine engines.

LESSON TOPIC LEARNING OBJECTIVES

Terminal Objective:
Partially supported by this lesson topic:

3.0 Upon completion of this unit of instruction, the student will demonstrate knowledge of the fundamentals of power plants and associated accessory systems.

Enabling Objectives:
Completely supported by this lesson topic:

3.16 Describe purpose and the types of inlet ducts.

3.17 State the operation and shape of subsonic and supersonic inlet ducts.

3.18 State the function of a variable geometry inlet duct.

3.19 State the function of the compressor section.

3.20 Describe the three types of compressors used in gas turbine engines, including their advantages and disadvantages.

3.21 State the function of the burner section.

3.22 Describe the three types of combustion chambers used in gas turbine engines, including their advantages and disadvantages.

3.23 State the function of the turbine section.

3.24 State the effects of thermal stress on turbine components.

3.25 Describe ‘fir tree’ and ‘creep’.

3.26 Explain how heat and potential energy are converted into mechanical energy in the turbine section.

3.27 State the function of the exhaust section.

3.28 Describe subsonic and supersonic exhaust nozzles.

3.29 State the function of the afterburner.

3.30 Describe the components and operation of the afterburner.

STUDY ASSIGNMENT

Review Information Sheet 3.2.1I and answer the Study Questions.

INFORMATION SHEET

Gas Turbine Engines
Information Sheet No. 3.2.1I

INTRODUCTION

As introduced in section 3.1, a gas generator consists of three sections: compressor, burner, and turbine (Figure 3.2-1). These sections form the core of all gas turbine engines. Since nearly all modern military aircraft utilize gas turbine engines, a basic understanding of their components and operation is essential for the student of aviation.

In comparison to turbofan, turboprop, and turboshaft engines, the turbojet is the simplest gas turbine engine design. It is created by attaching an inlet duct to the compressor section and an exhaust nozzle to the turbine section. To provide a basic description of gas turbine operation, this lesson will examine the operation of a turbojet engine. The operation of inlet ducts, compressor sections, burners, turbines, and exhaust nozzles will be discussed, as well as a description of after-burner operation. Later lessons will cover the configurations of other gas turbine engines in detail.

REFERENCES

1. NAVAIR 01-T34AAC-1, NATOPS FLIGHT MANUAL
2. NAVEDTRA 12300, Sep 91, 0502-LP-214-6100
3. CNAT P-P-301 “T-34C Aircraft Familiarization Workbook”

INFORMATION

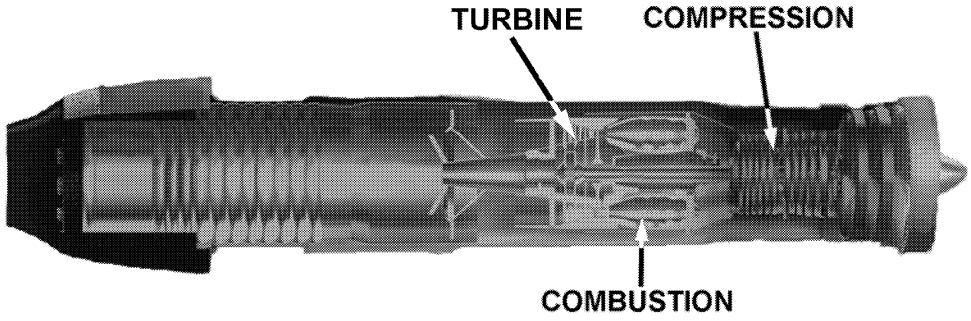

Figure 3.2-1 Gas Generator

Recall that increasing the pressure of airflow will increase its potential energy, while increasing the velocity of airflow will increase its kinetic energy. In a gas turbine engine, the inlet, compressor, and diffuser sections build the potential energy of the airflow. In the burner, turbine and exhaust sections, this potential energy, along with

the energy from fuel ignition, is converted into kinetic energy. The kinetic energy is then used for thrust production. Therefore, in the first half of a gas turbine engine, high pressures are desired, while high velocities are desired in the second half.

INLET DUCT

Although technically part of the airframe, **inlet ducts** (Figure 3.2-2) are essential to the efficient operation of a gas turbine engine. It is designed to provide the proper amount of high pressure, turbulence-free air to the compressor. It must operate with high efficiency from ground idle to possible supersonic speeds at a variety of altitudes and attitudes.

Figure 3.2-2 Inlet Ducts

INLET DUCT DESIGN

Inlet ducts are normally designed to act as a diffuser but never as a nozzle. The inlet duct must also be made as straight and smooth as possible. This will reduce airflow distortion and friction along inlet surfaces which may produce pressure

fluctuations that can both reduce engine efficiency and increase the possibility of a compressor stall (discussed in chapter 3). The opening of an inlet duct must also be designed to minimize any drag that it may create. In addition, the design must minimize the intake of boundary layer air (a layer of still, dead air lying along airframe surfaces).

Two basic designs for the inlet ducts are single entrance and divided entrance ducts.

SINGLE ENTRANCE INLETS

The **single-entrance inlet duct** (Figure 3.2-3) is the simplest and most effective inlet duct design. Located directly in front of the engine, it is positioned to collect generally undisturbed air. In single engine aircraft, the engine is usually mounted amidship (as in the F-16), and a single entrance duct is necessarily long. While the length of the inlet duct may result in a slight pressure loss, it is offset by smooth airflow characteristics.

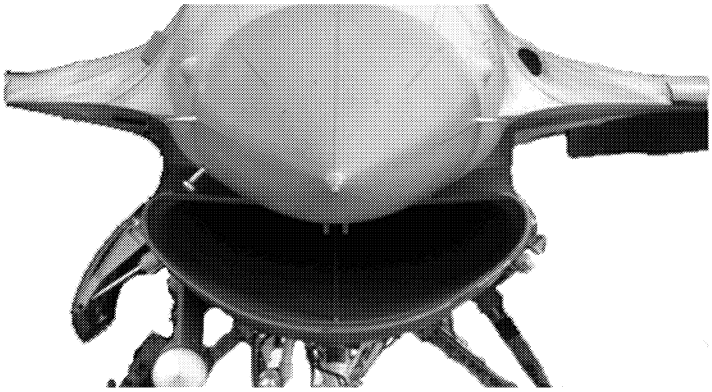

Figure 3.2-3 Single Entrance Inlet Duct

DIVIDED ENTRANCE INLETS

The **divided-entrance inlet duct** can be found in a variety of aircraft, including the AV-8 (Figure 3.2-4). While it allows the pilot to sit lower in the fuselage and reduces friction losses due to length, the divided-entrance inlet duct does present some problems.

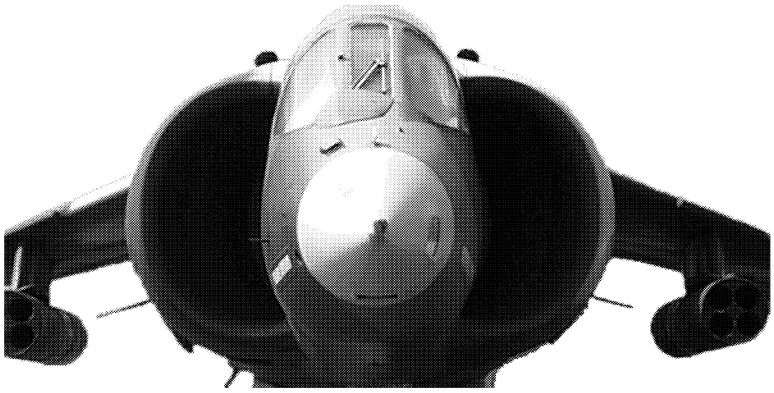

Figure 3.2-4 Divided Entrance Inlet Duct

Because divided inlets are usually located along the side of the airframe, boundary layer air and skin friction may distort the incoming air. To alleviate this problem, the ducts are often offset from the fuselage to allow the boundary layer air to be directed overboard.

Another problem for a divided-entrance inlet duct is that it cannot be made very large without increasing aircraft drag. Since the airflow must be routed from the sides of the aircraft to its centerline, some curvature of the inlet path is required, which may, in turn, cause airflow turbulence.

SUBSONIC AND SUPERSONIC INLETS

Inlet ducts may also be divided into subsonic and supersonic configurations. Each is designed to act as a diffuser within its intended flight regime. The design of the subsonic inlet duct is divergent-shaped. Because of the relative incompressibility of subsonic airflow, this shape of the subsonic inlet will increase airflow pressure while reducing its velocity (Figure 3.2-5).

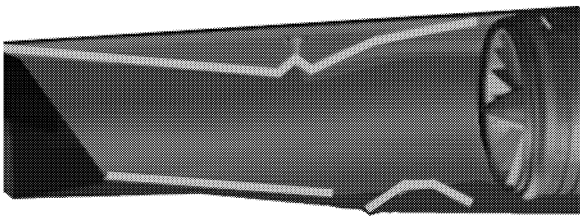

Figure 3.2-5 Subsonic Inlet

The supersonic inlet duct is designed differently than the subsonic inlet duct due to the high compressibility of supersonic airflow (Figure 3.2-6). At supersonic speeds, sonic shock waves are developed. If these are not controlled, high duct losses (loss of inlet airflow) will result, and they might set up a vibration in the inlet duct known as inlet buzz. This buzz is an airflow instability caused by the shock wave rapidly being swallowed and expelled at the inlet of the duct.

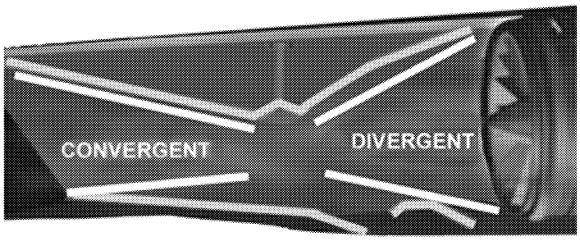

Figure 3.2-6 Supersonic Inlet

Another reason for controlling the sonic shock waves is to prevent damage to the face of the compressor. These shock waves are violent fluctuations of air and have been known to damage ground structure windows at fair distances. If supersonic airflow was allowed to enter the gas generator, the rapid deceleration of supersonic airflow would cause these sonic shock waves and possibly damage the intricate rotor/stator blades in the compressor. Therefore, a supersonic inlet duct must decrease airflow velocity below sonic speeds, then further reduce velocity and increase pressure like a subsonic inlet duct.

A supersonic inlet will initially converge. The highly compressible supersonic airflow is slowed to a value less than sonic velocity and pressure will be increased. At the outlet of the convergent shape, the airflow velocity will be subsonic, but still too high to send to the compressor.

At this point the airflow is relatively incompressible, and the shape must be divergent like the subsonic inlet duct. The divergent shape continues the conversion of

velocity into high-pressure airflow for use in the compressor. Put together, these two sections form the convergent-divergent shape of a supersonic inlet duct.

Obviously, a supersonic aircraft will slow to subsonic speeds to land or conserve fuel. At subsonic speeds, the convergent-divergent shape is undesirable. To solve this problem, some aircraft use a variable geometry inlet duct.

The **variable geometry inlet duct** utilizes mechanical devices such as ramps, wedges, or cones to change the shape of the inlet duct as the aircraft speed varies between subsonic and supersonic.

Figure 3.2-7 illustrates how the inlet ramp of an F-14 changes the shape of the inlet duct to act as a diffuser throughout all flight regimes. At subsonic speeds, the duct is divergent. This reduces airflow velocity while increasing its pressure. As the aircraft accelerates, airflow becomes more compressible, and a computer programs the ramp down. At supersonic speeds, the passage becomes fully convergent-divergent. This inlet will allow the aircraft to fly at speeds unattainable by a conventional convergent inlet duct.

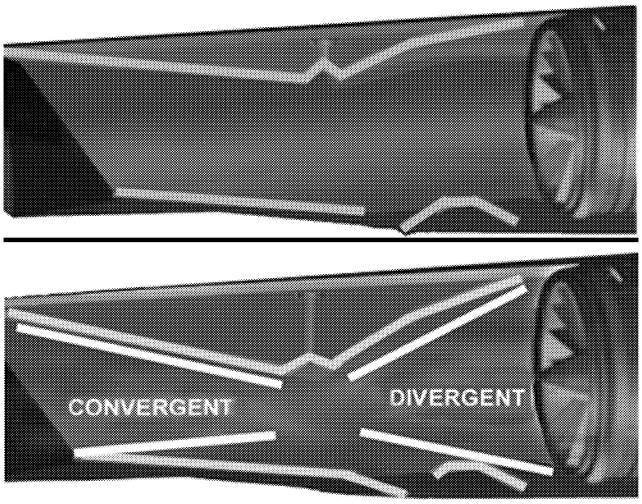

Figure 3.2-7 Variable Geometry Inlet Duct

F-15s and the new F-18D also use the wedge type variable geometry inlet. Other inlet designs that has the same function as the variable geometry inlet include: Cones/spikes, leading edge generated oblique shockwaves, etc. These designs decrease the airflow velocity while increasing pressure so that the aircraft can fly through all flight regimes.

"The T-34C engine receives inlet airflow through an engine air intake located in the lower right front of the engine cowling. Outside air enters this intake, then flows

through a circular plenum chamber formed around the engine compressor section, and is filtered into the engine at an air inlet opening. This entrance is covered by a circular foreign object damage (FOD) screen to prevent foreign object ingestion."

COMPRESSOR SECTION

The primary function of the compressor is to supply enough air to satisfy the requirements of the combustion section. Specifically, the compressor increases the pressure of the airflow from the air inlet duct and directs it to the burners in the quantity and at the pressures required. A secondary function is to supply compressor bleed air to operate various components throughout the engine and aircraft (We will discuss bleed air operations in further chapters).

Because the compressor section receives energy from the turbine via the drive shaft, it is not a closed system. Therefore, the increase in velocity will not result in a decrease in pressure. In fact, both velocity and pressure will increase in the compressor section and therefore, total pressure increases.

There are three types of compressors used in the construction of gas turbines: Centrifugal, axial, and axial-centrifugal flow compressors.

CENTRIFUGAL FLOW COMPRESSOR

Centrifugal flow compressor consists of three main components: an impeller (also known as the rotor inducer), a diffuser, and a manifold (Figure 3.2-8). Air enters this type of compressor near the center of the impeller. The impeller, which is driven at high speeds by the turbine, accelerates the air outward toward the diffuser. This high rotational speed increases airflow velocity. As the air is accelerated outwards, it passes through divergent passages on the impeller. This divergence causes a pressure increase. Since the airflow velocity and pressure is increased by the impeller, total pressure is increased.

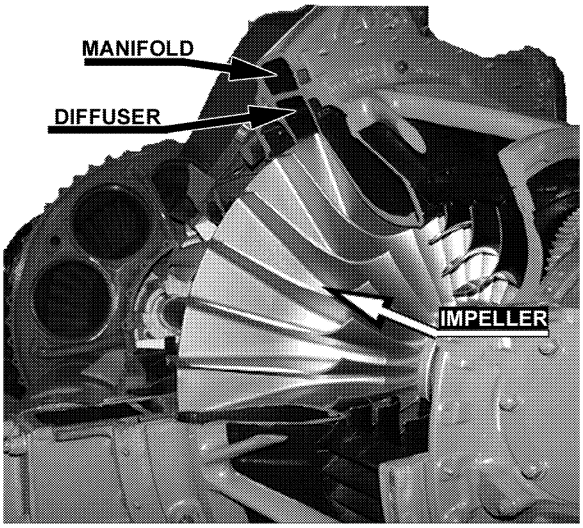

Figure 3.2-8 Centrifugal Compressor

As the air is thrown from the outer rim of the impeller, it is forced through divergent passages in the diffuser. The diffuser is stationary and therefore it does not add energy to the airflow. The divergent passages in the diffuser convert the high velocity airflow to high pressure. Thus, velocity decreases, pressure increases, and total pressure remains the same. The airflow then passes through the compressor manifold, which directs it to the combustion chamber.

Centrifugal-flow compressors may be utilized in several configurations: single-stage, multiple-stage or dual-faced. No matter which configuration is used, centrifugal flow compressors have several attractive features.

It would seem that extremely high compression ratios might be obtained with multiple stages. However, efficiency is quickly lost in multi-stage configurations due to the convoluted path the airflow must follow as it passes from one stage to the other. A dual-faced impeller, however, with airflow entering at both sides of the impeller, may help to alleviate this problem somewhat, but efficiency remains limited. This inefficiency rules out the use of a centrifugal-flow compressor for larger aircraft, since higher compression ratios are necessary for reduced fuel consumption and increased thrust.

Due to the inherent problems of drag and low overall compression ratios, the centrifugal-flow compressor finds its greatest application on small engines. This is where simplicity, operational flexibility and ruggedness are more important than the ability to handle high rates of airflow.

Centrifugal Compressor

Advantages	Disadvantages
1. Rugged	1. Large frontal area required
2. Low cost	2. Impractical for multiple stages
3. Good power output over a wide range of RPMs	
4. High pressure increases per stage	

AXIAL-FLOW COMPRESSOR

Axial-Flow Compressors - The term axial-flow applies to the axial (straight line) flow of air through the compressor section of the engine. An axial-flow compressor has two main elements: Rotor blades and stator vanes. **Rotor blades** are rotating, airfoil-shaped blades, while **stator vanes** are stationary airfoil-shaped blades. Each rotor and stator pair forms a stage (Figure 3.2-9).

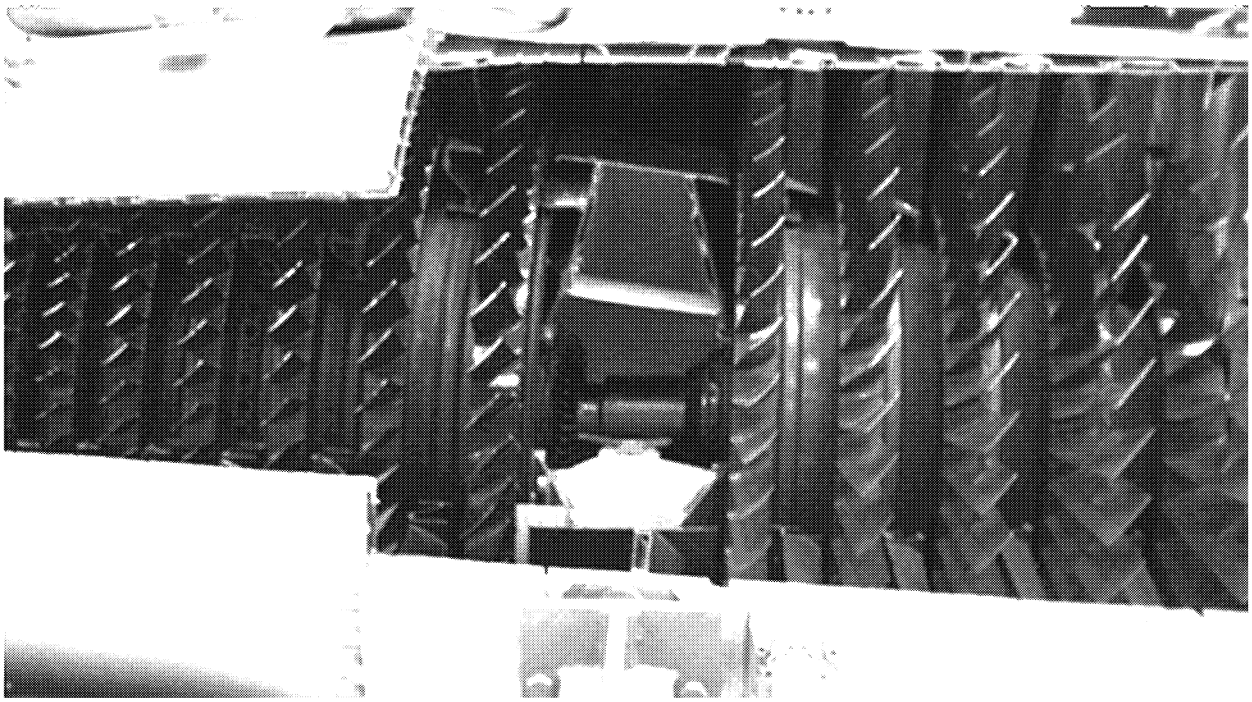

Figure 3.2-9 Multiple-Stage Axial Flow Compressor

The rotors are driven by the turbine at high speeds (near 15,000 RPM), which increases the velocity and pressure of the incoming airflow, thus, increasing total pressure. This high velocity airflow is then pushed through the stator vanes which act like diffusers (the airflow velocity decreases with a proportional increase in pressure). The airflow then passes on to the next rotor/stator stage and the process continues.

The compressor is setup so that the airflow velocity remains fairly constant from inlet to exit. As the airflow pressure increases through each compressor stage, the air is compressed. If the air is compressed and its volume is not decreased, its velocity will decrease excessively toward the rear stages of the compressor and the stall area will be approached (discussed in chapter 3).

Although the pressure increase per stage is not as great as in a centrifugal flow compressor, the efficient use of multiple stages can produce very high overall compression ratios. Current axial flow compressors have efficiencies near 90 percent and compression ratios approaching 15:1. Several high performance engines have compression ratios near 25:1. Remember that typical centrifugal compressors can only attain compression ratios between 6:1 and 7:1.

Unfortunately, the delicate blades, especially toward the rear, make this type of compressor especially susceptible to FOD. Furthermore, the number of compressor blades and vanes (which can exceed 1,000), the close fits, and the narrow range of

operating conditions make the axial flow compressor both complex and expensive. For this reason, the axial flow compressor finds its greatest application where the considerations of efficiency and power outweigh cost and simplicity. The small frontal area of this design is also beneficial to high-speed aircraft due to decreased drag.

Dual spool axial flow compressor - Greater flexibility and power can be achieved in the axial flow compressor through what is known as a **dual spool** (also known as twin or split spool) compressor. In this configuration, the compressor is divided into two completely independent rotor spools, each driven by its own turbine and drive shaft (Figure 3.2-10). One spool is known as the low-pressure compressor, while the other is known as the high-pressure compressor.

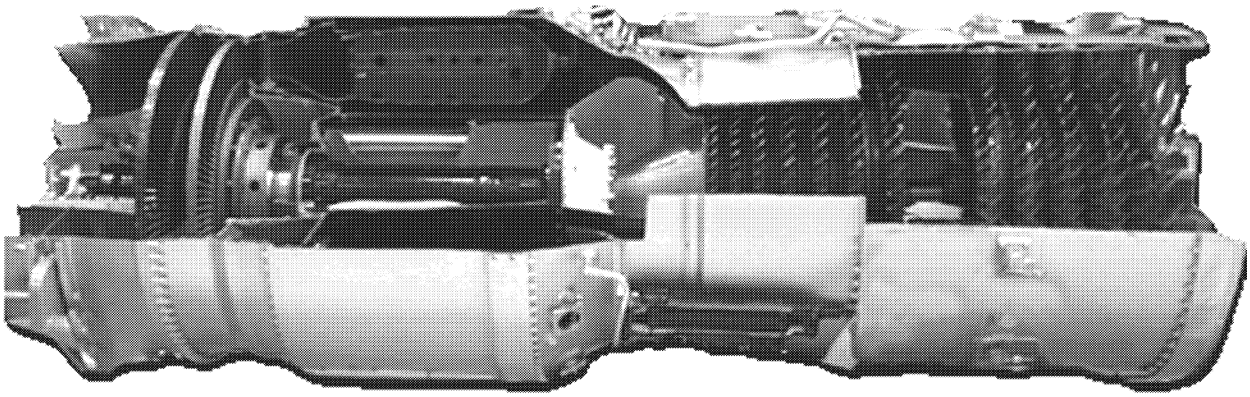

Figure 3.2-10 Dual Axial Flow Compressor

The low-pressure compressor is located at the front of the compressor section. It will provide the initial pressure increase to airflow arriving from the inlet. As such, this compressor spool must spin slow enough to provide an initial pressure increase without creating an excessive velocity increase.

The high-pressure compressor is located after the low-pressure compressor, and provides a further increase to airflow pressure. This compressor is turned by the high-pressure turbine. Located forward of the low-pressure turbine, the high-pressure turbine will receive more energy from the combustion section. Therefore, it will turn the high-pressure compressor at a faster rate.

The high-pressure spool is turned at higher speeds by the high-pressure turbine, both because it is smaller and lighter weight, and because the high-pressure turbine is located directly after the burner chamber. This higher speed helps to produce a vacuum, which eases the transition from the low to the high pressure compressor.

A basic law of aerodynamics states that the speed of sound increases as the air temperature increases. Since the air temperature is increased through the

compression phase, the high-pressure compressor can attain higher speeds without exceeding the speed of sound (Mach). Also, the blades of the high-pressure compressor are shorter than those of the low-pressure compressor, and can turn faster before exceeding their limiting Mach number.

When a dual-axial compressor is used in an engine, higher compression ratios can be attained with minimum total compressor weight and frontal area. Usually, the rear compressor rotor is speed-governed by the engine fuel control and is the rotor to which the engine starter is connected.

Axial Flow Compressor

Advantages

1. High peak efficiencies
2. Small frontal area reduces drag
3. Straight through-flow, allowing for high ram efficiency
4. Combustion efficiency is better than centrifugal compressors (increased pressure rise by increasing the number of stages)
5. With the dual/twin/split spool, starting flexibility is greater and it has improved high-altitude performance

Disadvantages

1. At low inlet speed, airflow will decrease in the compressor, creating a high angle of attack on the rotor blades that could lead to a compressor stall (compressor stall discussed in later chapter).
2. High-speed aircraft may experience an inlet air temperature of 250 degrees F. because of ram effect. These high compressor inlet air temperatures cause low compression ratios (due to air density changes) and will also reduce the air supply to the rear of the compressor
3. Good efficiencies only possible over a narrow rotational-speed
4. Difficulty of manufacture and high cost
5. High starting power requirements

AXIAL-CENTRIFUGAL FLOW COMPRESSOR

Axial-Centrifugal Flow Compressor - A third type of compressor design utilizes the combination of the axial and centrifugal flow compressor (Figure 3.2-11). The main advantage is the large pressure increase yet small size that is useful on helicopters and small aircraft.

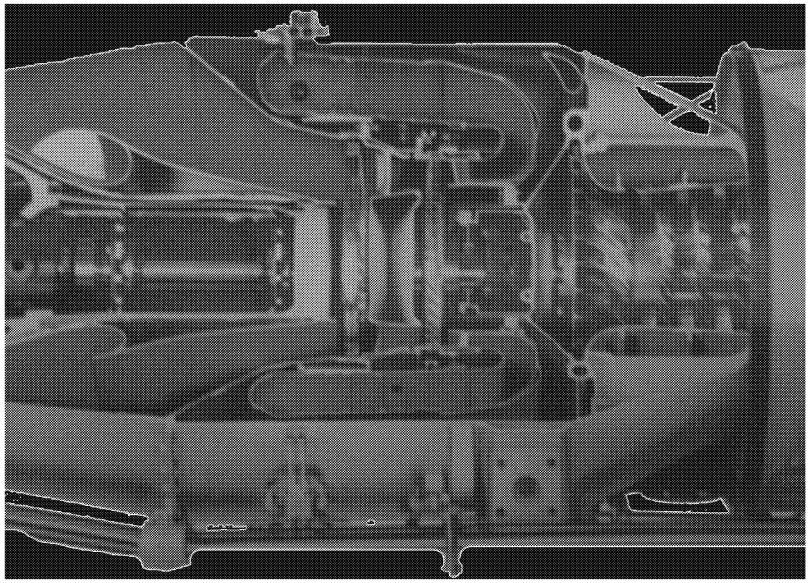

Figure 3.2-11 Axial-Centrifugal Flow Compressor

The axial section allows for 'straight through' ram efficiency and multiple stages for high pressure. The centrifugal section significantly increases that pressure through its one stage. The small cross section of the centrifugal section keeps the engine relatively small. Combined, the axial-centrifugal compressor keeps the engine small yet powerful enough for today's mission requirements on many smaller aircraft.

Guide Vanes - In addition to the rotors and stators, the compressor utilizes inlet and exit guide vanes.

Inlet guide vanes (Figure 3.2-12) impart a swirling motion to the air entering the compressor in the direction of engine rotation. This motion improves the aerodynamic characteristics of the compressor by reducing the drag on the first-stage rotor blades.

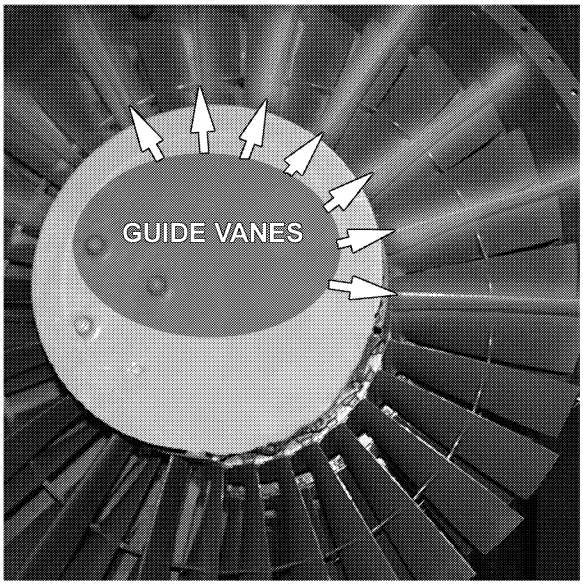

Figure 3.2-12 Inlet Guide Vanes

Exit guide vanes (Figure 3.2-13), also known as straightening vanes, are located at the discharge end of the compressor. They are the last set of stator vanes which prepares the airflow for the diffuser by straightening the airflow to reduce the airflow turbulence as it comes off the rotational movement of the compressor.

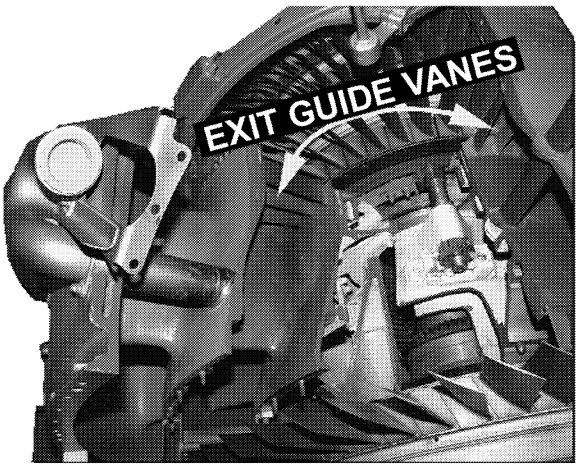

Figure 3.2-13 Exit Guide Vanes

The **diffuser** (Figure 3.2-14) is located after the compressor, and it prepares the airflow for the burner chamber. The diffuser decreases the velocity, which gives the airflow a final pressure increase. The airflow velocity must decrease slightly to avoid blowing out the burner flame, and the increase in pressure helps combustion and fuel efficiency.

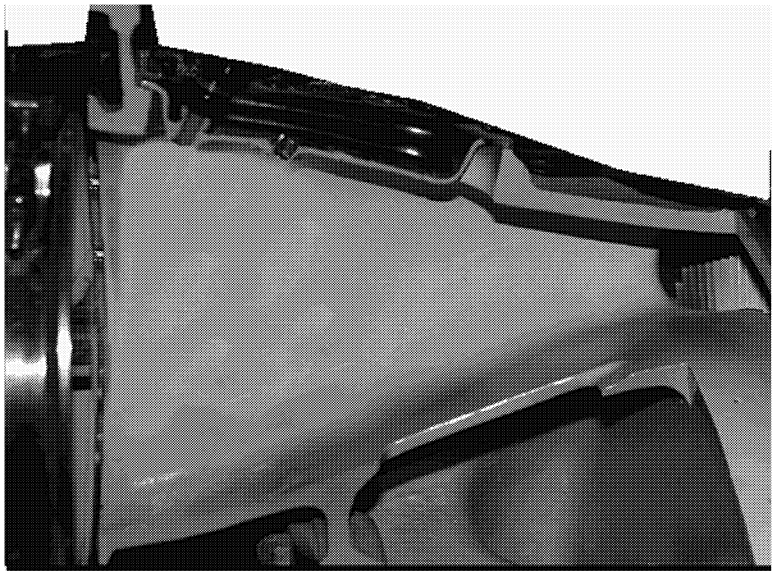

Figure 3.2-14 Diffuser

COMBUSTION / BURNER SECTION

Airflow from the compressor entering the burner section will be divided into two types: primary and secondary air. Twenty-five percent is **primary air**, and it is mixed with fuel for combustion. The remaining 75 percent is **secondary air**, it flows around the chamber and through the small holes and louvers to cool the thin walls and control the flame. This unburned air can also be used to help cool the turbine and for afterburner operation.

The **burner section** (Figure 3.2-15) contains the combustion chamber, and provides the means for proper mixing of the fuel and air to assure good combustion. The development of burner systems presents many challenges in the areas of thermodynamics, fluid mechanics and metallurgy. It must deliver the combustion gases to the turbine section at a temperature that will not exceed the allowable limit of the turbine blades. The chamber must also, within a limited space, add sufficient heat energy to the gases passing through the engine to accelerate their mass and produce the desired thrust for the engine and power for the turbines.

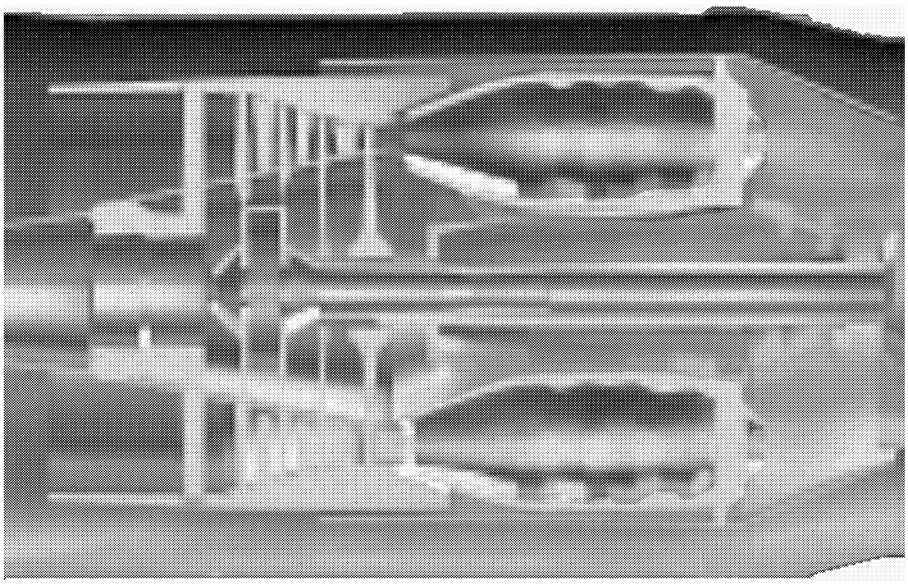

Figure 3.2-15 Burner Section

The heat produced per cubic foot by a large turbojet engine is several thousand times that of the heat released by an ordinary home furnace. The pressure within a 10,000-pound thrust combustion chamber, enclosed by a relatively thin steel wall, is about ten times as great as the pressure within an industrial furnace enclosed in thick firebrick. The high temperature requires that some of the air introduced to the burner section by the compressor be used for cooling.

The criteria considered when designing the burner section are:

a. Minimize pressure decrease through the burner.
b. Combustion efficiency must remain high.
c. The flame must not blow out.
d. All burning must be complete before the gases enter the turbine section.

Criteria b and c should be obvious. The pressure drop (criteria a) should be small because high pressure is needed to turn the turbines. Burning should be complete (criteria d) because energy would be wasted if the gases continued to burn through the turbines. Also, continued burning has the potential of damaging the turbine blades.

The three general types of combustion chambers in use today are**: can, annular, and can-annular** combustion chambers. Each has its advantages and disadvantages.

CAN COMBUSTION CHAMBER

The can type combustion chamber is used most frequently on older centrifugal compressor engines. The airflow is ducted to individual combustion cans that are arranged around the circumference of the burner section (Figure 3.2-16). Each burner can contains its own fuel nozzle, burner liner and casing. Primary air introduced at the nozzle supports combustion, while secondary air flows through, between, and around the liner and burner case to provide cooling.

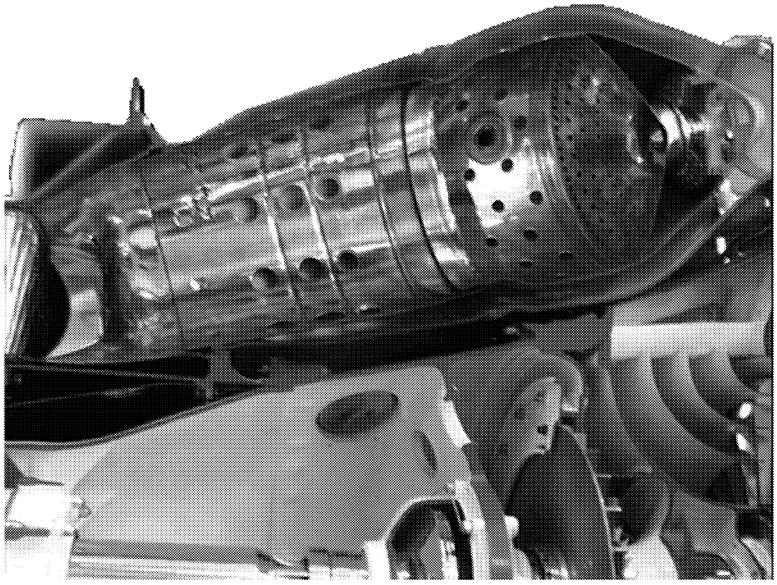

Figure 3.2-16 Can Type Combustion Chamber

Advantages of the can combustion chamber lie in its strength and durability, combined with the ease of maintenance. Individual units can be inspected or replaced without disturbing the rest of the engine.

Disadvantages of the can combustion chamber include poor use of space in the chamber, greater pressure loss, and uneven heat distribution to the turbine section. Since each can directly adjoins the turbine section, a malfunction of one can may lead to turbine damage due to non-uniform temperature distribution at the turbine inlet.

ANNULAR COMBUSTION CHAMBER

The liner of the annular combustion chamber (Figure 3.2-17) consists of a continuous, circular, inner and outer shroud around the outside of the compressor drive shaft. The liner is often called a “burner basket” or “basket” because of its shape and the many holes that allow cooling air inside. In this type of chamber, fuel is introduced through a series of nozzles where it is mixed and ignited with the incoming air.

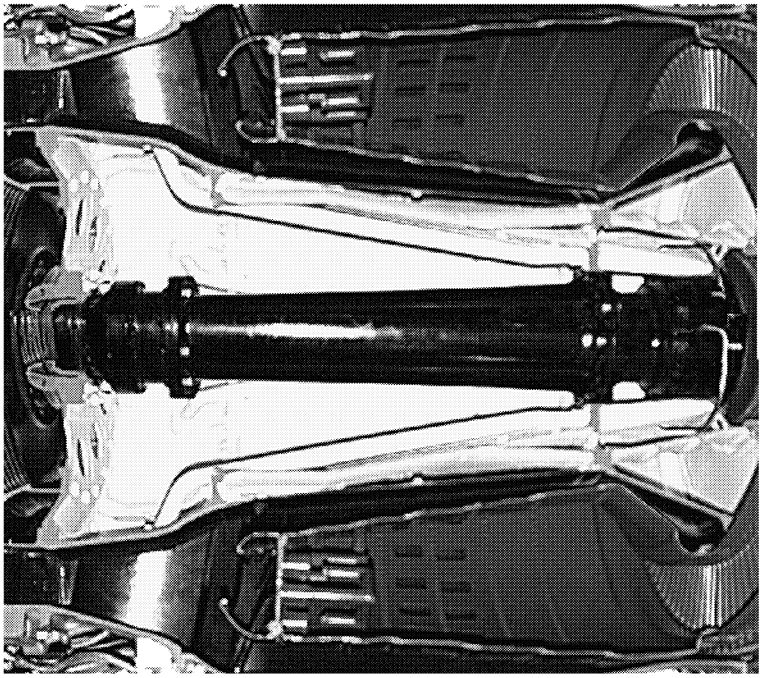

Figure 3.2-17 Annular Type Combustion Chamber

Advantages of the annular combustion chamber include uniform heat distribution across the face of the turbine section, which aids in the prevention of heat warping or turbine blade failure. The configuration allows for better mixing of the air and fuel. It also makes better use of available space.

The disadvantages of the annular combustion chamber include that the unit cannot be removed without first disassembling the engine from the aircraft. Also, structural problems may arise due to the large-diameter, thin-wall cylinder required with this type of chamber. This type of burner is most often found on smaller engines, such as those of helicopters, where engine removal and tear down is not too difficult.

CAN-ANNULAR TYPE

Used primarily on larger, high performance engines, the can-annular combustion chamber combines the ease of maintenance of the can type with the excellent thermodynamics of the annular type. The can-annular combustion chamber (Figure 3.2-18) consists of cans at the front where the fuel and air are mixed and burned.

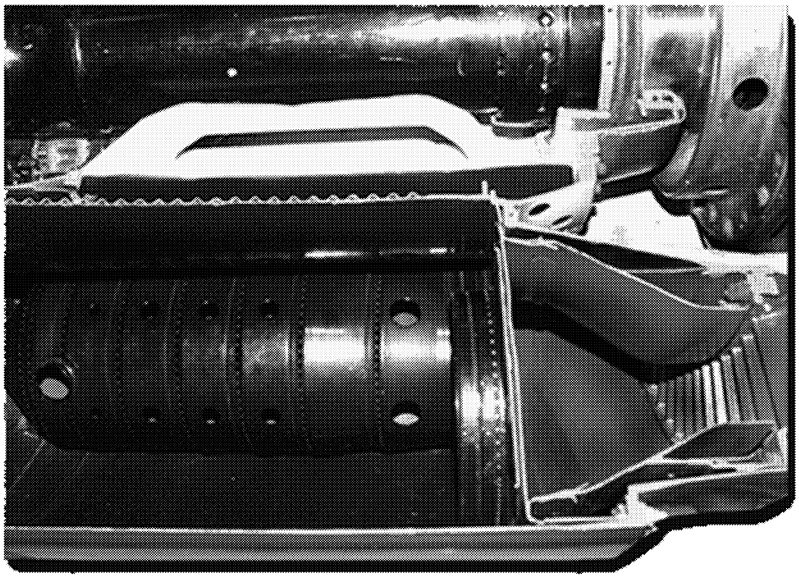

Figure 3.2-18 Can – Annular Type Combustion Chamber

Since the frontal area is where most problems occur (fuel nozzle failure or "burn-through"), an engine needs the structural strength of the can along with its ability to be easily inspected or replaced. The hot gases then pass to the annular area of the chamber where they are mixed together. This design provides an even temperature distribution at the turbine inlet and eliminating the possibility of cold spots caused by nozzles clogging. It also has greater structural stability and lower pressure loss than that of the can type. Though this type of design is efficient, its disadvantage is that it is expensive.

TURBINE SECTION

Like the compressor, the turbine section is comprised of stators and rotors. However, the turbine section drives the compressor and the accessories. It is also designed to increase airflow velocity. This acceleration occurs through the stators, rotors, or both (Figure 3.2-19 and Figure 3.2-20).

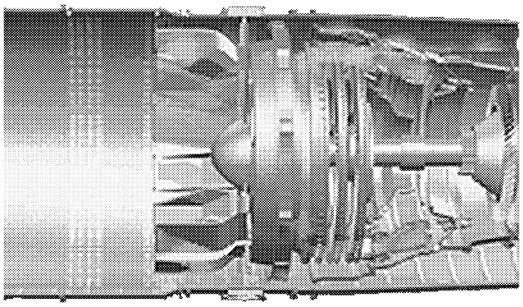

Figure 3.2-19 Turbine Section

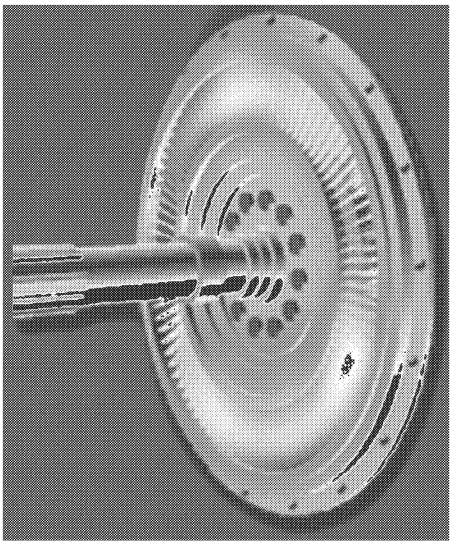

Figure 3.2-20 Turbine Rotor Blades & Stator Vanes

The stator element is sometimes called stationary stator vanes, turbine, nozzle guide vanes, turbine guide vanes, or just plain nozzles. Stator vanes come before the rotors in the turbine section. The function of the stator vanes is twofold. First, it prepares the airflow from the combustion chamber for the harnessing of power by the turbine rotor. Second, the stators deflect the gases at a specific angle in the direction of turbine wheel rotation.

The turbine's rotor section converts the heat energy (potential and kinetic) of the hot expanding gases from the burner chamber into mechanical energy. Approximately 75 percent of that total pressure energy from the exhaust gases is converted. The exact amount of absorption in the turbine is determined by the load the turbine is driving. The load on the turbine is affected by the compressor size, compressor type, and accessories. The remaining 25 percent of the available energy is used for thrust. That 25 percent is utilized differently by the four types of gas turbine engines that will be discussed in later topics.

Turbines, like compressors, may be either single or multistage. The turbine wheels may be operated independently, depending upon the type of engine and the power requirements of the turbine. A dual-spool compressor will require dual turbines driving the compressors via separate shafts (Figure 3.2-21).

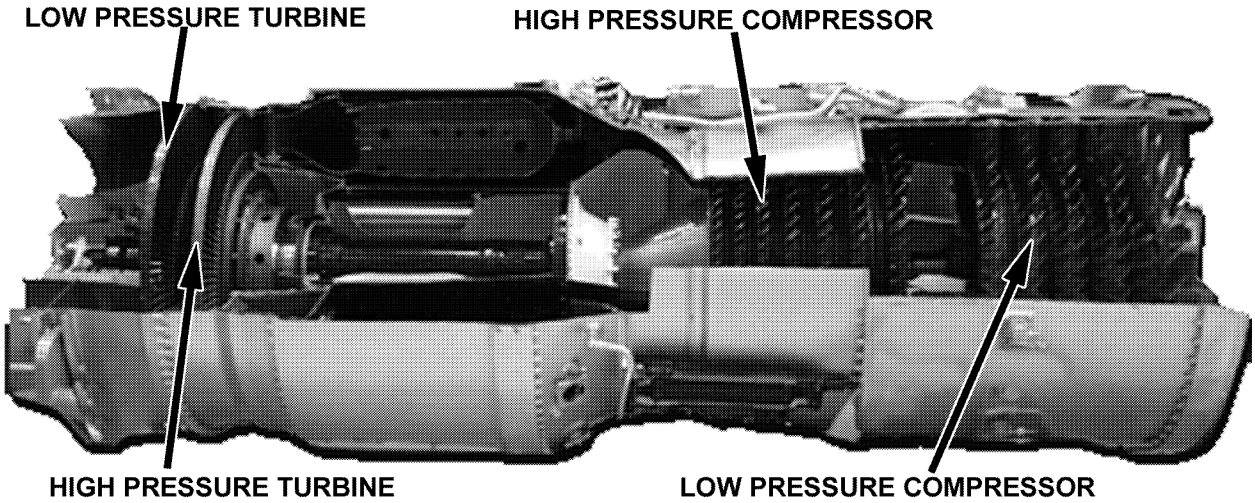

Figure 3.2-21 Dual Turbine

The turbine section is the most highly stressed part of the engine. Not only must it operate at temperatures nearing 2,000 °F (monitored in the cockpit), but it must do so while undergoing severe centrifugal loads imposed by rotational speeds of over 10,000 rpm. The higher the temperature the turbine section can bear, the higher the thrust that can be produced. As an example, increasing the turbine inlet temperature from 1,700° to 2,500 °F (less than a 50 percent increase), will result in a specific thrust increase of about 130 percent with a corresponding decrease in fuel consumption. For this reason, high operating temperatures are desirable. However, not all construction materials can withstand these temperatures. For this reason, exotic materials such as titanium and ceramics are used in the construction of gas turbines.

Blades undergo elongation, or **"creep"**, as they are heated. This is a cumulative process, and excessive temperatures over long periods may result in permanent blade deformation. Deformed blades will not operate efficiently and may fail catastrophically causing severe damage and possible injury or death to personnel.

Turbine blades are not welded to the rotor shaft. They are attached to the shaft by a method called **"Fir Tree".** This attachment method prevents the thin metal blades from cracking at the attachment points by allowing them to expand when heated. Although this does not eliminate thermal stress, it does improve the turbine blades' ability to handle high temperatures and repeated heating and cooling throughout the life of the engine (Figure 3.2-22).

Figure 3.2-22 Fir Tree

"The turbine section of the T-34 consist of two, independently shafted, single-stage turbines. The compressor turbine (also called the N_1 turbine) rotates counterclockwise, driving the axial and centrifugal compressors and driving the accessory gearbox. The power turbine (also called N_f turbine) rotates clockwise and imparts torque to the propeller shaft via a two-stage reduction gear system. Between the two turbine wheels are eight temperature-sensing probes called thermocouples which provide an indication of interstage-turbine temperature (ITT)."

EXHAUST SECTION

The exhaust section of the turbojet engine is constructed of several parts, each of which has its individual functions. Although the parts have individual purposes, they have one common function. They must direct the flow of hot gases rearward to cause a high exit velocity to the gases while preventing turbulence. If a majority of the gas expansion takes place in the turbine section, as in a turboprop and turboshaft, the exhaust section merely acts to conduct the exhaust stream towards the rear.

The exhaust section is directly behind the turbine section. The parts include the exhaust outer duct, exhaust inner cone, and three or four radial hollow struts (Figure 3.2-23). These hollow struts are used to support the inner cone from the outer duct and also to straighten the swirling gas flow exiting the turbine section. The exhaust cone collects the exhaust gases discharged from the turbine assembly and gradually converts them to a solid jet.

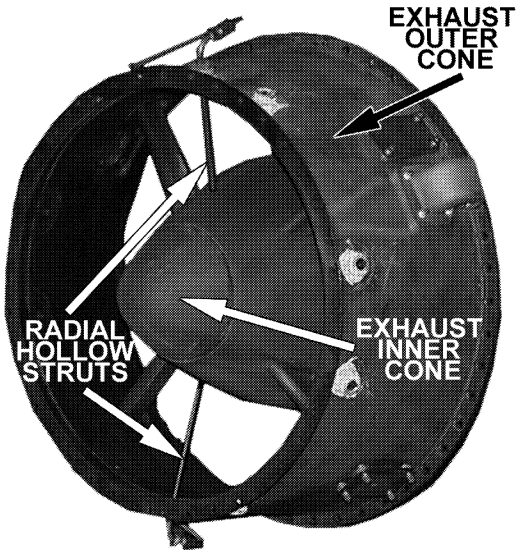

Figure 3.2-23 Exhaust Section

Two types of exhaust nozzles are used: the convergent type and the convergent-divergent type. Generally, the convergent type has a fixed area, and is used in subsonic aircraft. Supersonic aircraft use a variable geometry convergent-divergent nozzle.

CONVERGENT NOZZLES

The convergent nozzle takes relatively slow subsonic gases from the turbine section and gradually accelerates them through the convergent section. Since the subsonic gas is relatively incompressible, each gas molecule is in effect being pushed from behind, causing it to increase in velocity. Since this velocity increase is faster than the volume expansion, a converging area is needed to maintain this squirting action (Figure 3.2-24).

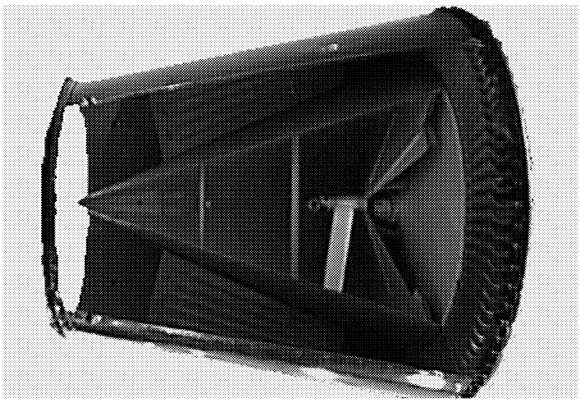

Figure 3.2-24 Convergent Exhaust Nozzle

In the convergent exhaust section, the gases cannot exceed the speed of sound. As the gas velocity increases, the ability of the pressure to push the molecules from behind decreases.

CONVERGENT-DIVERGENT NOZZLES

If the remaining static pressure within the airflow exiting the turbine wheel is still high, the possibility exists to change that pressure into supersonic flow. In this case, a convergent-divergent exhaust nozzle can be used. Though the principle is reversed, the supersonic, or “C-D”, nozzle works like the supersonic inlet. With enough pressure pushing from behind, the exhaust gases can be accelerated to high sonic speeds in the convergent section. At this point, the gases become highly compressible. To allow the airflow to continue its velocity increase, the volume outward and rearward must increase (Figure 3.2-25). To control the expansion and velocity of these gases, a variable nozzle is employed.

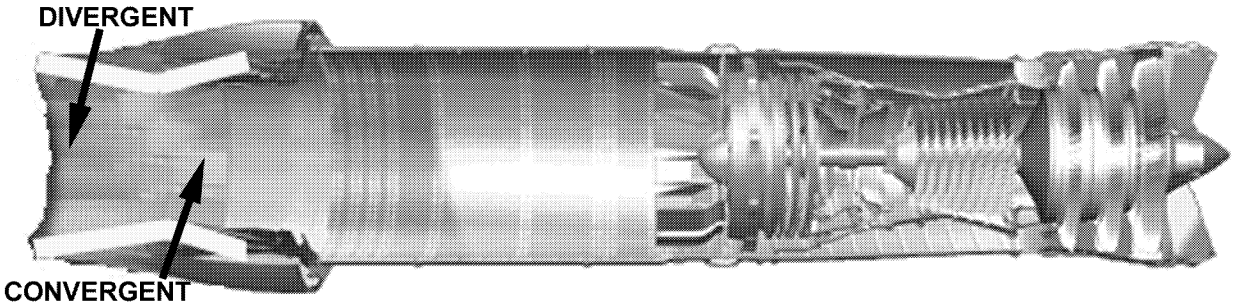

Figure 3.2-25 Convergent / Divergent Exhaust Nozzle

Current engines in fighter aircraft, however, are not efficient enough to produce supersonic airflow with only the “C - D” configuration. In order to propel the aircraft to supersonic speeds, a thrust augmentation unit called an afterburner must be incorporated. These aircraft will have the variable nozzle aft of the afterburner unit.

AFTERBURNER SECTION

Afterburning, or thrust augmentation, is a method used in turbojets and turbofans to increase the maximum thrust available from an engine by 50 percent or more. However, this increase comes at the expense of fuel consumption, which increases some 300 percent. Afterburner is used during instances where added thrust is required for short periods such as takeoff, increasing rate of climb, high speeds, or providing extra performance in a combat situation (Figure 3.2-26)

Secondary air from the burner section is used for combustion in the afterburner section on turbojets. Secondary air along with bypass air is used for afterburner combustion on turbofans (discussed in a later chapter). The ignition of this air mixed with fuel results in a large temperature rise and a great acceleration of the gases.

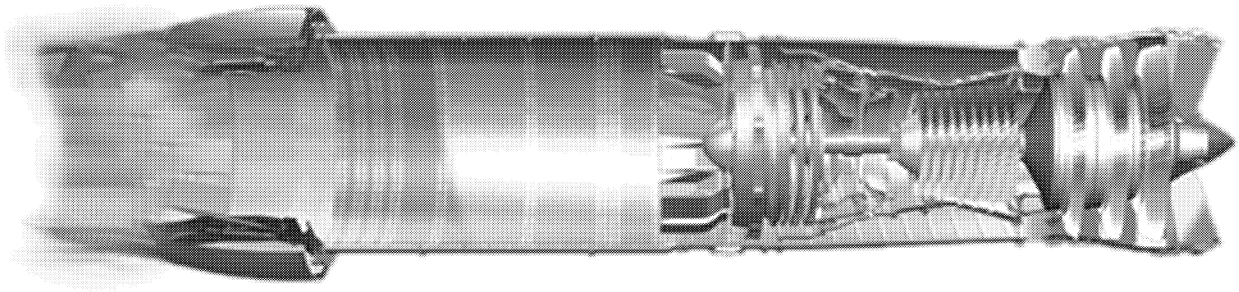

Figure 3.2-26 Gas Generator with Afterburner Unit

A typical afterburner assembly consists of many parts such as the afterburner fuel control unit, pressurizing valve, ignition system, the afterburner duct, etc. At this time, we will concentrate on four parts: the spray bars, the flame holders, the screech liner and the variable exhaust nozzle (Figure 3.2-27).

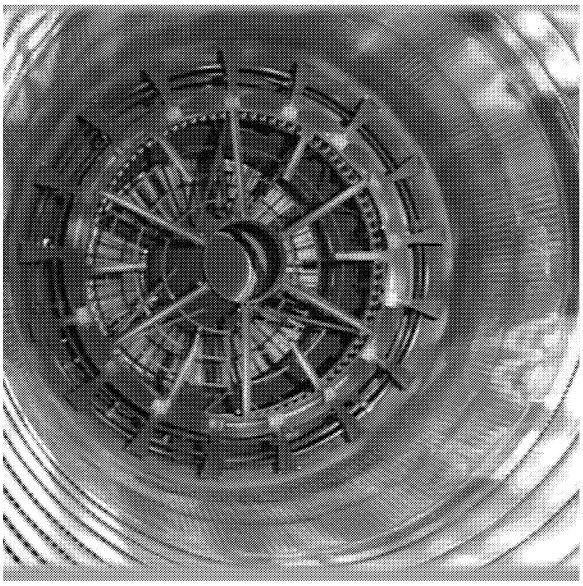

Figure 3.2-27 Afterburner Assembly

Spray bars (Figure 3.2-28) introduce fuel to the afterburner and they are located in the forward section of the duct. In some engines, the afterburner can vary the amount of fuel being introduced to determine the degree or zones of afterburning. Other engines can only engage or disengage afterburner operations.

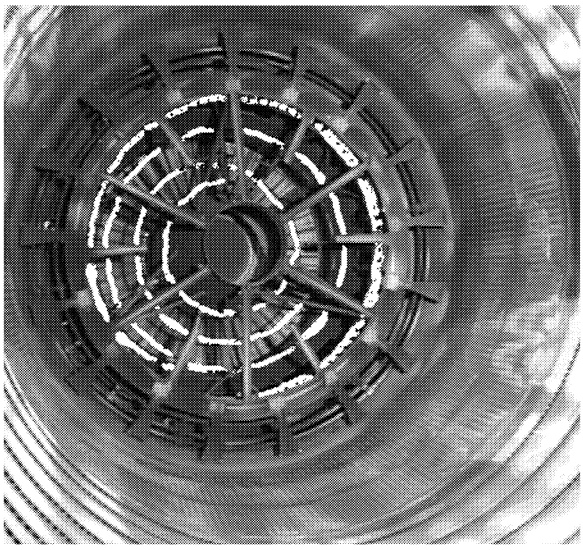

Figure 3.2-28 Spray Bars

The duct area for afterburner operations is larger than a normal exhaust duct in order to obtain a reduced-velocity gas stream and thus, reduce gas friction losses. This reduced velocity, however, is still too high for stable combustion. Therefore, it is necessary to use a form of flame stabilization or **flame holder** (Figure 3-2.29) that is located downstream of the fuel spray bars. The flame holder provides a region in which airflow velocity is reduced and turbulent eddies are formed. This allows the proper mixing of fuel and air for combustion. These flame holders usually take the form of several concentric rings with a V cross-sectional shape.

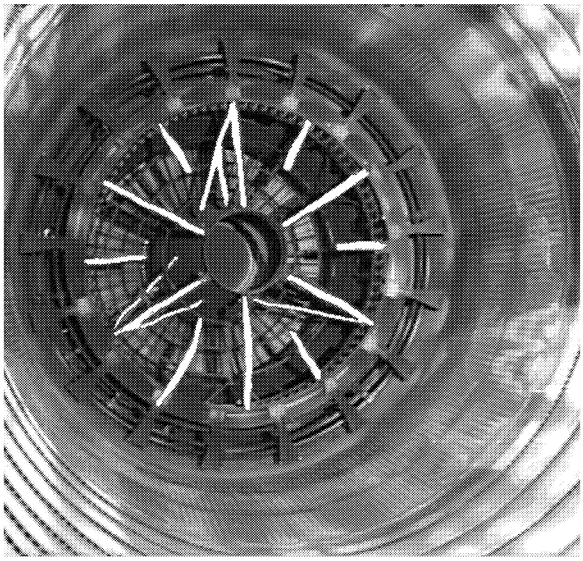

Figure 3.2-29 Flame Holder

Occasionally, a phenomenon known as screech occurs, in which violent pressure fluctuations caused by cyclic vibrations can greatly reduce efficiency. Screech is characterized by loud noise and vibration. To control screech, inner sleeves, known as **screech liners** (Figure 3.2-30) are installed. These sleeves are generally corrugated and perforated with thousands of holes that allow the liner to reduce pressure fluctuations and vibrations by acting as a form of shock absorber.

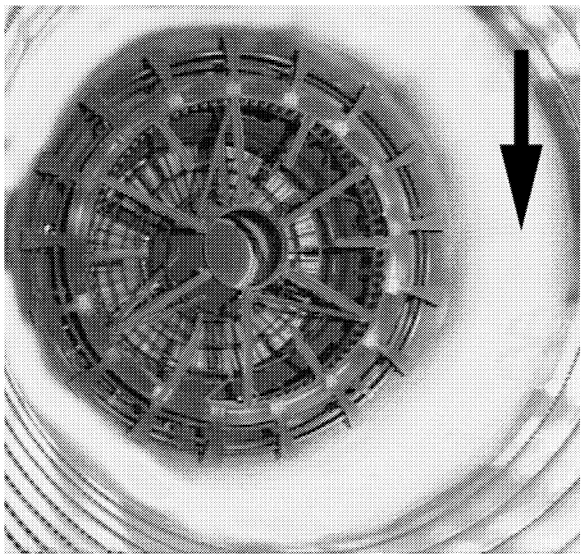

Figure 3.2-30 Screech Liner

When only the basic engine is in use, the exhaust nozzle must be convergent to allow for acceleration of the gases. However, as was seen earlier, the exhaust section must become convergent-divergent for supersonic operation. To accomplish this, a variable exhaust nozzle is used. Using an iris arrangement or a leaf arrangement of thin metal plates, commonly called "**turkey feathers**", this **variable exhaust nozzle** can close for basic engine subsonic operation, or open to allow the gases to expand at the proper rate when the afterburner is being used. This prevents the gases from backing up and causing a back pressure, which can stall an engine (Figure 3.2-31).

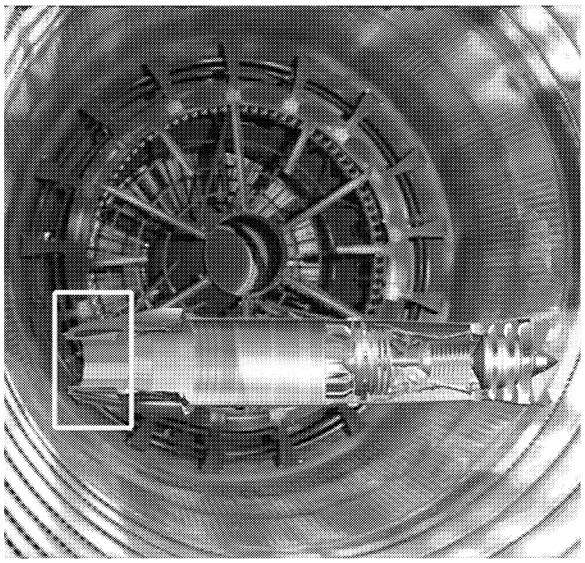

Figure 3.2-31 Variable Exhaust Nozzle

STUDY QUESTIONS

Gas Turbine Engines

1. What is the purpose of the engine inlet?

2. Why should the inlet duct be constructed with a straight section?

3. What are the advantages of a single-entrance duct?

4. What is the shape of a subsonic inlet duct? Why?

5. What is the shape of a supersonic inlet duct? Why?

6. What is the purpose of a variable geometry inlet duct?

7. What are the advantages and disadvantages of a centrifugal compressor? Of an axial flow compressor?

8. What are the parts of a centrifugal compressor and what is the function of each?

9. What are the components of an axial flow compressor?

10. Why do rotor and stator vanes within an axial compressor decrease in length from the front to rear of the compressor?

11. What do inlet and exit guide vanes do?

12. What is the function of the diffuser?

13. Describe a dual-spool axial flow compressor. Why is it used?

14. Where is fuel introduced within a gas turbine engine?

15. What is the criteria for a good burner section?

16. What are the three types of combustion chambers? What are the advantages and disadvantages of each?

17. What is primary and secondary air?

18. What is the purpose of the turbine section?

19. How much of the energy produced is used to turn the compressor and accessories?

20. What are the main parts of the turbine?

21. What is creep?

22. What is the purpose of the exhaust duct?

23. Describe a subsonic and supersonic exhaust duct and how each operates.

24. Describe the four parts of an afterburner.

25. Describe how an afterburner operates.

26. What controls the amount of thrust augmentation an afterburner will produce?

27. What is the function of the spray bars? The flame holder?

28. What is a screech liner and how does it operate?

29. What type of exhaust nozzle is used on an afterburner equipped aircraft?

ASSIGNMENT SHEET

Compressor Stalls
Assignment Sheet No. 3.3.1A

INTRODUCTION

This assignment will introduce and aid the student in understanding compressor stalls.

LESSON TOPIC LEARNING OBJECTIVES

Terminal Objective:
Partially supported by this lesson topic:

3.0 Upon completion of this unit of instruction, the student will demonstrate knowledge of the fundamentals of power plants and associated accessory systems.

Enabling Objectives:
Completely supported by this lesson topic:

3.31 Name two vector components that make up the relative wind in the compressor.

3.32 Describe a compressor stall.

3.33 Describe the angle of attack of compressor blades and the two factors that determine it.

3.34 Identify the indications of a compressor stall.

3.35 Identify the two main causes of a compressor stall.

3.36 Describe how airflow distortions can cause compressor stalls.

3.37 Describe four possible mechanical malfunctions that can lead to a compressor stall.

3.38 Describe what a pilot can do to minimize the potential of a compressor stall.

3.39 Describe four components that can be incorporated into an engine design to minimize the potential of a compressor stall.

3.40 State the steps to be taken if compressor stall occurs.

STUDY ASSIGNMENT

Review Information Sheet 3.3.1I and answer the Study Questions.

INFORMATION SHEET

Compressor Stalls
Information Sheet No. 3.3.1I

INTRODUCTION

Awareness of compressor stalls and their effects are critical to the safe and efficient operation of aircraft engines. Rotors and stators, like all airfoils, quickly lose their effectiveness upon entering into a stall. In fact, aggravated compressor stalls may eventually lead to engine flameout. Therefore, it is essential for everyone in aviation to be able to quickly recognize, avoid and recover from compressor stalls.

REFERENCES

1. NAVEDTRA 12000 AIRMAN, 1990
2. CNAT P-307 (Rev 2-91) pat
3. T-34C NATOPS manual

INFORMATION

CHARACTERISTICS

Within the compressor, the **relative wind** is formed by combining the compressor rotation (RPM) and the inlet airflow. The angle between this relative wind and the rotor blade's chordline make up the **angle of attack (AOA)** (Figure 3.3-1) for the compressor.

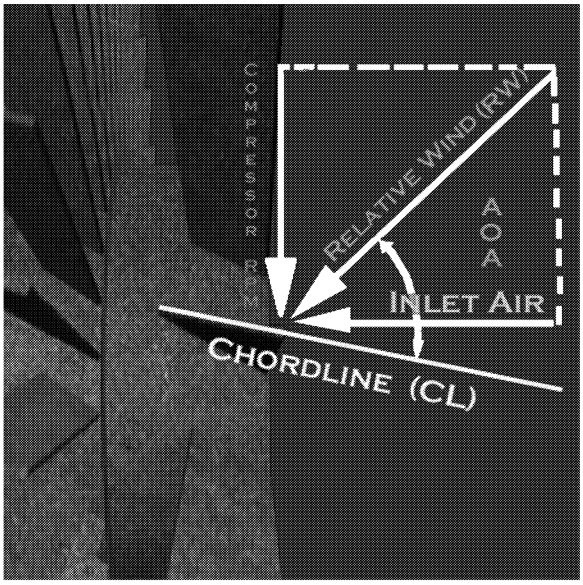

Figure 3.3-1 Angle of Attack

A stall occurs when airflow over an airfoil breaks away causing the airfoil to lose lift due to excessive angle of attack.

The compressor is designed to provide the optimum compression ratio. This ratio is formed by optimizing the angle of attack for each stage of the compressor. If the angle of attack to the rotors is too low, the compression ratio will be low and the compressor will be inefficient. Conversely, too high of an angle of attack yields a possible stall. It may seem that the angle of attack of the rotor blades would never change since they are installed on the rotor disk at a fixed angle; however, changing the rotation speed of the

rotors during engine operation and/or changing the velocity of the inlet airflow will cause the compressor's angle of attack to change. Therefore, anything that decreases the inlet airflow or increases compressor RPM will increase the angle of attack and therefore increase the possibility of a compressor stall.

INDICATIONS

Indications of a compressor stall (Figure 3.3-2) depend on the severity of the stall. It can range from mild pulsation with minimum indications to aircraft vibration and loud bangs or noises. Since a compressor stall results in a reduction of airflow to the turbines, more fuel will be required to maintain the current thrust. This increase in fuel will increase burner and turbine temperature. Therefore, with a constant PCL position, indications of a compressor stall include RPM decay, and/or interstage turbine temperature (ITT) rise, along with possible loud noises.

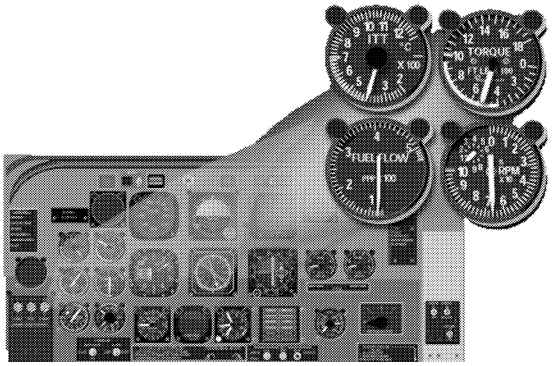

Figure 3.3-2 Stall Indicator

"If the T-34C engine (PT6A-25) compressor stalls, it may be characterized by an audible change in engine noise with fluctuations in torque, ITT, N1 (compressor speed), and fuel flow. Additionally, flames and smoke may be visible from the engine exhaust stacks."

CAUSES

Compressor stalls are mainly the result of airflow distortions or mechanical malfunctions.

AIRFLOW DISTORTION

Airflow distortion is the most common cause of a compressor stall. A compressor stall is normally caused by a breakdown of the airflow through a few stages of the compressor. A compressor stall could progress until the complete unit has stalled.

Airflow distortion to the compressor can be a result of the aircraft attitude and airspeed. At high aircraft angles of attack, the air entering the inlet slows and becomes turbulent, as shown in Figure 3.3-3.

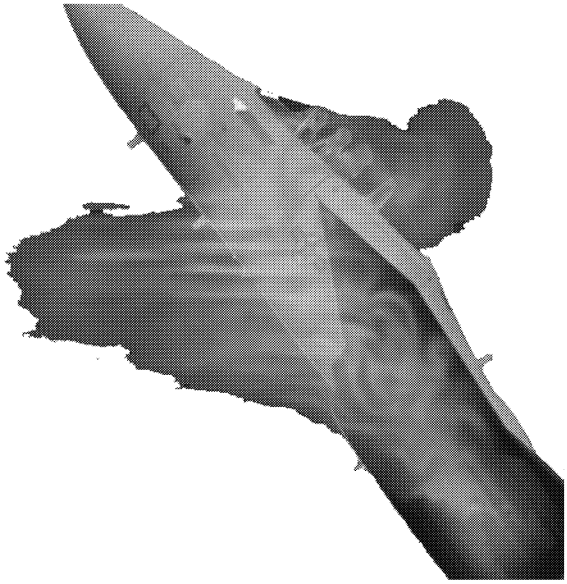

Figure 3.3-3 Airflow Distortion

As the airflow travels back through the compressor, the angle of the rotors and stators changes. This is to compensate for the change in direction and velocity of the air as it travels through each successive stage. At normal airflow and compressor speeds, the angle of attack is not excessive. However, if the velocity of the incoming air or the speed of the rotor blades changes, the angle of attack changes and may become excessive. Therefore, at high aircraft angles of attack, or when the incoming air is slowed or turbulent, there is the possibility of compressor stall. This is of particular concern in the landing pattern, where engine performance must be perfect.

The instances when airflow distortions may induce compressor stall include:

1. Abrupt change in aircraft attitude
2. Encountering air turbulence
3. Deficiency of air velocity or volume, caused by atmospheric conditions
4. Rapid throttle movement

MECHANICAL MALFUNCTIONS

Mechanical malfunctions are the other main cause for a compressor stall; which, depending on its severity, could result in a complete engine loss. The four mechanical malfunctions discussed here are:

1. Variable inlet guide vane and stator vane failure
2. Fuel control unit (FCU) failure
3. Foreign Object Damage (FOD)
4. Variable exhaust nozzle failure

Variable inlet guide vanes (IGV) and stator vanes - Failure to change the angle of attack will cause too much or too little airflow at low engine speed.

The **fuel control unit (FCU)**, which will be discussed in further depth in later lesson topics, determines the proper amount of fuel to be introduced into the combustion chamber. When operating properly, the fuel control unit gradually meters fuel into the combustion chamber upon PCL inputs. Should the FCU fail, too much fuel or too little fuel may be added to the burner. An over-rich mixture (too much fuel) causes excessive burner pressure and a back-flow of air into the compressor that leads to a compressor stall. Too lean a fuel mixture (too little fuel) may cause the engine to flame out which can be just as hazardous depending on the situation.

Foreign object damage (FOD) is caused when an object damages the delicate blades of the compressor. Remember that the blades are airfoils with specific aerodynamic properties. Having a screw, piece of wire or loose rock strike the compressor blades at high speed will result in deformation of the blade. This will change its aerodynamic properties. Some FOD damaged blades can be blended out, but normally the entire engine requires replacement.

Variable exhaust nozzles are needed when an afterburner is used. The nozzle is closed at subsonic speeds and opened to allow the exhaust gases to expand properly when the afterburner is in operation. If the variable exhaust nozzle fails to open, an excessive back pressure will be produced which could lead to a compressor stall.

AVOIDANCE

There are several things a pilot can do to avoid a stall or reduce the possibility of a compressor stall. Erratic or abrupt Power Control Lever (PCL) movements should be avoided, especially at low airspeeds or high angles of attack. The PCL should be advanced or retarded in a smooth fashion. Additionally, the pilot should maintain at least the prescribed minimum airspeed and avoid abrupt changes in aircraft attitude to

allow the proper amounts of smooth air to enter the inlets. Also, the pilot should avoid flight through severe weather and turbulence.

PREVENTION

For our discussion, there are four system components that the engine manufacturer can utilize to reduce the possibility of compressor stall:

1. Variable inlet guide vane and stator vane failure
2. Dual/twin/split-spool compressor
3. Bleed valves
4. Variable exhaust nozzle failure

Variable inlet guide vanes and variable stator vanes are installed so the angle of attack is changed at low engine speed. These variable inlet guide vanes and stator vanes are automatically positioned by the stator vane actuator (SVA) using fuel pressure via the fuel control unit. This action maintains the velocity of the air (and the angle at which it strikes the blades) within acceptable limits for low airflow conditions. It also permits high airflow with a minimum of restriction.

Dual/twin/split-spool axial flow compressors may be incorporated. This compressor design allows the front rotor to turn at a slower RPM than the rear rotor. This allows the front rotor to turn without being choked by the low airflow.

Bleed valves are installed near the middle or rear of the compressor to “bleed” (vent to the atmosphere) air and increase airflow in the front of the compressor at low engine RPMs.

Variable exhaust nozzle is used to unload the pressure during afterburner operation.

“On the engine of the T-34C, a compressor bleed valve, located in the compressor section at the 7 O'clock position, automatically opens a port to spill interstage compressor air to provide anti-stall characteristics. During engine start the bleed valve is in the open position to prevent compressor stall.”

REMEDY AND RECOVERY

Once a stall occurs, the first reaction should be to reduce the attitude of the aircraft (possibly lower the nose) which will reduce the inlet’s angle of attack. This allows turbulent free air to enter the inlet at the proper velocity. The PCL should then be retarded to just below stall threshold to allow the engine to "catch up" with the inlet airflow. In addition, many aircraft will have automatic bleed valves or a procedure that

will be followed to open a valve to allow airflow through the compressor. Once engine indications return to normal, the PCL may be slowly advanced to the desired setting.

Safety of flight must always be emphasized. It is not wise to retard the PCL to idle and drop the nose just after take-off or just before landing. Experience will be the best teacher for the various situations an aviator may encounter. If the stall condition cannot be remedied, and depending on the type of aircraft, it may be wise to shut down the engine to prevent irreparable damage to the engine and possibly to the aircraft.

STUDY QUESTIONS

Compressor Stalls

1. What are some indications of a compressor stall?

2. What causes a compressor stall?

3. Other than compressor stall resulting from mechanical malfunctions, what causes most stalls?

4. What determines the angle of attack on a compressor blade?

5. List some flight conditions that could cause a compressor stall.

6. How can FOD affect compressor performance?

7. What automatically compensates for acceleration and deceleration schedules to help prevent stalls?

8. How can an exhaust nozzle cause a compressor stall?

9. What are some of the ways manufacturers decrease the possibility of stalls?

10. What should a pilot do to avoid compressor stalls?

11. What should be done if a stall cannot be controlled?

ASSIGNMENT SHEET

Turbojet and Turbofan Engines
Assignment Sheet No. 3.4.1A

INTRODUCTION

This assignment will aid the student to understand turbojet and turbofan engines.

LESSON TOPIC LEARNING OBJECTIVES

Terminal Objective:
Partially supported by this lesson topic:

3.0 Upon completion of this unit of instruction, the student will demonstrate knowledge of the fundamentals of power plants and associated accessory systems.

Enabling Objectives:
Completely supported by this lesson topic:

3.41 Identify the components of a turbojet engine.

3.42 Define thrust specific fuel consumption (TSFC).

3.43 Describe the operation of a turbojet engine.

3.44 Compare the propulsive efficiencies of a turbojet, turbofan, and turboprop.

3.45 Compare TSFC of a turbojet with the turbofan.

3.46 Describe the characteristics of a turbojet engine.

3.47 Identify the components of a turbofan engine.

3.48 Describe the basic operation of a turbofan engine.

3.49 Describe the characteristics of a turbofan engine.

3.50 State the average percentage of total thrust produced by the fan.

3.51 State the average percentage of total thrust produced by the exhaust gases of the gas generator on a turbofan engine.

3.52 Explain how the fan is driven by the turbine section.

3.53 Define bypass ratio.

3.54 Explain how bypass ratio effects a turbofan engine's TSFC.

STUDY ASSIGNMENT

Review Information Sheet 3.4.1I and answer the Study Questions.

INFORMATION SHEET

Turbojet and Turbofan Engines
Information Sheet No. 3.4.1I

INTRODUCTION

There are four types of gas turbine engines in use today: the turbojet, turbofan, turboprop and the turboshaft. Each of these engines is built around a gas generator. Turboprops and turboshafts will be explained in the following lesson topic.

REFERENCES

1. NAVEDTRA 12000; Airman TRAMAN, 1990
2. NAVEDTRA 12300; Aviation Machinist Mate 3&2, 1991
3. NAVEDTRA 10324-A; Aviation Machinist Mate 1&C, 1984
4. CNAT P-P-301 "T-34C Aircraft Familiarization Workbook"

INFORMATION

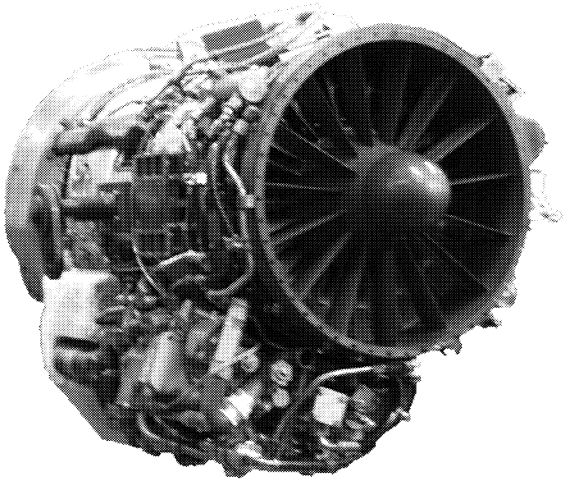

Figure 3.4-1 Turbojet Engine

<u>TURBOJET ENGINE</u>

The turbojet is the simplest form of gas turbine engine. It is constructed by the addition of an inlet and an exhaust section to the basic gas generator (Figure 3.4-1). The turbojet derives its thrust by highly accelerating a small mass of air through the engine. All the air entering the inlet traverses through the gas generator. The turbine section of the gas generator extracts only the necessary power from the hot gas stream

(75% of the total heat energy) to drive the compressor and accessories. The remaining energy from the airflow is used for thrust by accelerating the gases out the exhaust section.

Thrust Specific Fuel Consumption (**TSFC)** is the amount of fuel required to produce one pound of thrust. The propulsive force behind the turbojet is dependent upon the amount of fuel added to the air mass. This is a proportional relationship: more air requires more fuel. Since the density of the air decreases with an increase in altitude, the requirement for fuel is less at higher altitudes.

The total energy of the airflow within the gas generator is altered as it passes through each section. This altering of the airflow causes an imbalance of forces within the engine which provides the propulsive means to the turbojet engine (Force = Thrust). However, the exhaust gases of the turbojet engine is very inefficient at producing propulsive force at low airspeeds.

The propulsive efficiency of an engine is determined by the efficient conversion of kinetic energy to propulsive force by its propelling mechanism. In Figure 3.4-2, at low aircraft speeds, the turbojet's low-mass, high-velocity jet exhaust is considerably more wasteful than the propelling mechanism of the high-mass, relatively low-velocity airflow of a turboprop. However, this condition changes and energy waste is reduced at higher aircraft airspeeds. At high speeds, the turbojet's exhaust velocity relative to the surrounding atmosphere is lessened. If the aircraft's speed equaled the exhaust velocity, one hundred percent propulsive efficiency would be reached.

Examples of aircraft that use turbojet engines are the F-4, A-4, T-2, and T-37.

Characteristics of a Turbojet

Advantages	**Disadvantages**
1. Lightest specific weight (weight per pound of thrust produced	1. Low propulsive efficiency at low forward speeds
2. Higher and faster than any other engine	2. Relatively high TSFC at low altitude and low airspeeds
	3. Long takeoff roll required

These characteristics indicate that the turbojet engine is best suited for high-speed and/or high-altitude flights.

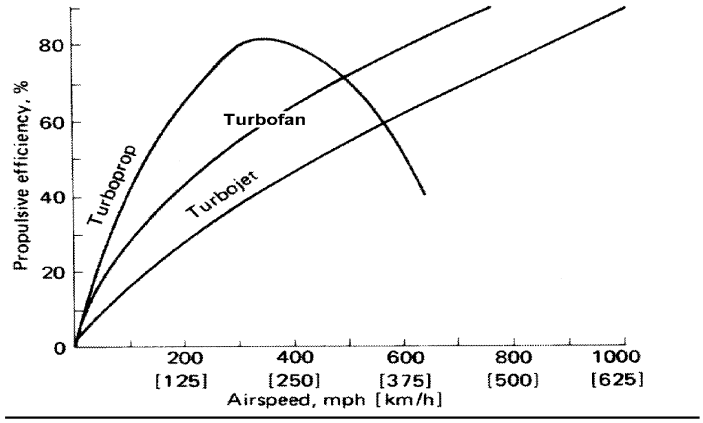

Figure 3.4-2 Engine Efficiency

TURBOFAN ENGINE

The turbofan engine can be considered a cross between the turbojet and the turboprop engine (turboprop will be discussed in the next lesson topic). The turbofan design combines the propulsive thrust of the exhaust gases from the gas generator with additional thrust that is generated by utilizing a duct-enclosed fan. This fan, which is driven by the gas generator, provides additional thrust by accelerating a fairly large mass of air around the gas generator (Figure 3.4-3). This airflow that goes around the gas generator is called **bypassed** or **ducted** air.

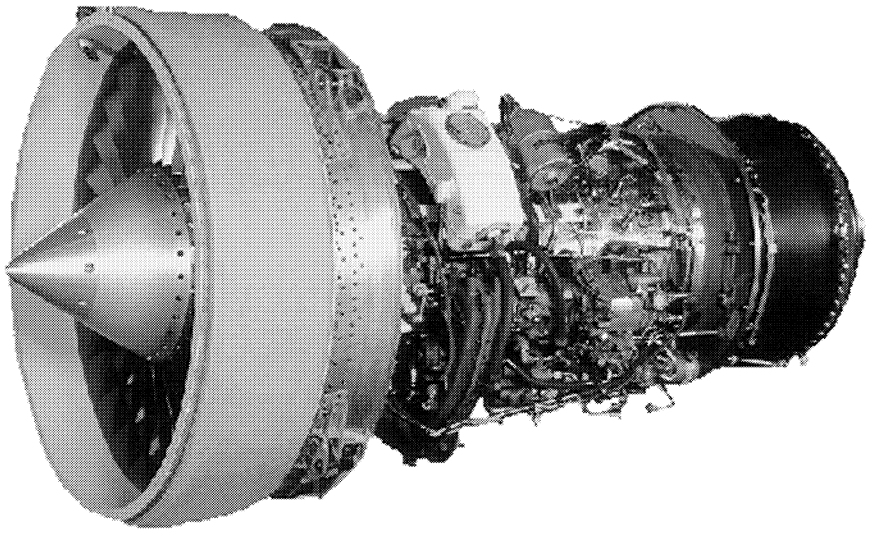

Figure 3.4-3 Turbofan Engine

On a forward-fan design, the fan blades look similar to rotor blades of the compressor that have been enlarged. The cross section of these fans are larger than the front area of the compressor. This allows a relatively large mass of air to bypass the gas generator. On average, this large mass of bypassed air can produce between 30 to 60 percent of the total thrust of a turbofan engine. Some engines have been designed with an even greater amount of thrust from the fans. These percentages depend upon the size of the fan, the turbine arrangements, and atmospheric conditions. Since the fans provide 30 - 60 percent of the total thrust, the gas generator exhaust gases will provide the remaining thrust, which is between 40 and 70 percent of that total thrust.

The fan is driven by the turbine section. A **free** or **power turbine** (Figure 3.4-4), which is a turbine aft of the gas generator turbines and is not connected to the gas generator, may drive the fan. In this configuration, the fan is also separate from the gas generator. Another way of driving the fan is through the gas generator turbine. This is done by attaching the fan directly to the compressor. In either instance, the gas generator turbine section will extract 75 percent of the total energy that leaves the burner section just to turn the compressor and accessories. The remaining 25 percent will be used for thrust. Part of the 25 percent will be converted to mechanical energy through the turbines to drive the fans. The other part will exit the exhaust section as kinetic energy.

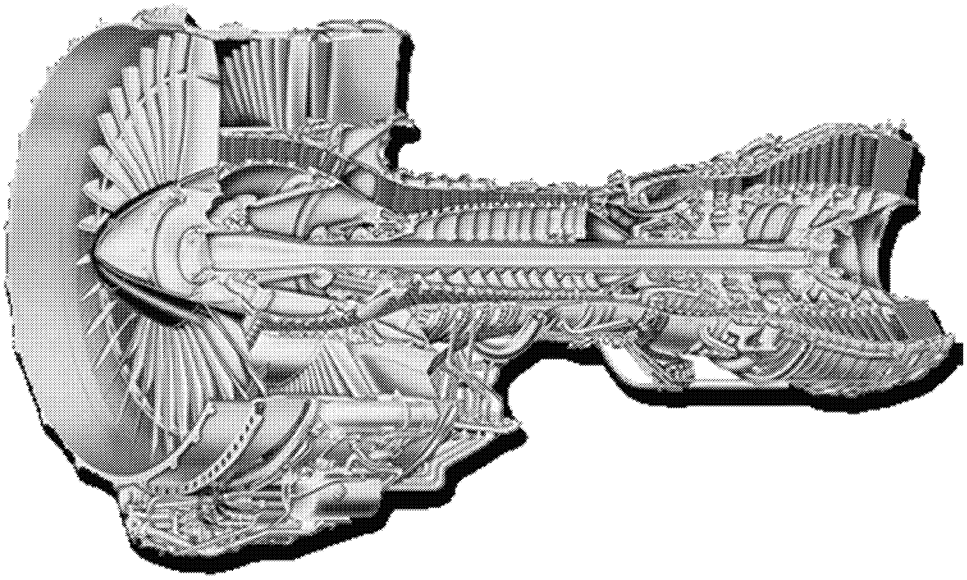

Figure 3.4-4 Free or Power Turbine

The efficiency of the turbofan engine is increased over that of a turbojet engine by converting more of the fuel energy into pressure energy rather than the kinetic (dynamic) energy of a high-velocity exhaust gas stream. In other words, it takes a relatively small amount of energy to turn the turbine, which drives the fans of a turbofan engine. These fans push a large mass of air which increases thrust (T=ma). Combined with the exhaust gases of the gas generator, the overall thrust is greater than the thrust of a turbojet at the same fuel consumption rate. Thus, to produce the same amount of thrust, the turbofan engine requires less fuel than a turbojet engine and therefore, the turbofan has a lower TSFC.

The amount of air that bypasses the gas generator in comparison with the amount of air that passes through the gas generator is called the **bypass ratio**. This ratio ranges from about 1 to 5 or more. For example, a bypass ratio of 2 : 1 means that for every two molecules of air that travels around the gas generator, one molecule goes through the gas generator. A bypass ratio of 6 : 1 has six molecules bypassing the gas generator and one molecule going into the generator. One of the primary design goals of today's engines is to maximize the bypass ratio while meeting mission requirements. The most fuel-efficient engines are those with the higher bypass ratio.

Typically, a higher bypass ratio yields a lower TSFC. An airliner, with its high bypass ratio engines, for example, could takeoff with a heavy load of personnel and travel large distances without refueling. A cargo aircraft could do the same with its payload. The high thrust of the high bypass turbofan engine at slower speeds allows for greater takeoff weights and shorter takeoff distance than a turbojet. The turbofan also performs better than the turbojet at operational altitudes and airspeeds.

Compared to the turbojet, the turbofan is quieter because of the generated thrust from the fans and not just burner combustion. Although performance is high, all turbofan engines are limited at high-end airspeeds and altitudes when compared to the turbojet.

The reduction of the high-end airspeed is due to the large mass of airflow from the fans that is accelerated to only moderate speeds. On a high bypass turbofan engine, more air is bypassed and therefore less thrust comes from the high velocity gases of the gas generator. The altitude limitation is from the lower density air at the high altitudes and therefore, a smaller mass of air is accelerated by the fans.

Typically, the engine of a modern fighter or interceptor, such as an F-14, F-15 or F-18, will be designed with a lower bypass ratio (Figure 3.4-5). This ratio will be in the vicinity of 1:1. Thus, this low bypass design closely resembles the characteristics of a turbojet yet it is more efficient which makes the low bypass design preferable for fighter aircraft.

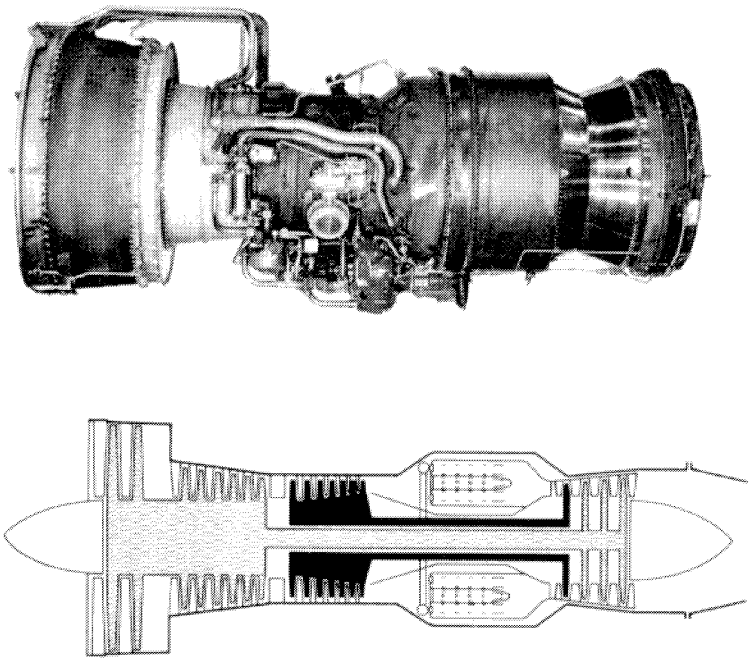

Figure 3.4-5 Turbofan

Some turbofan designs duct the bypass airflow immediately to the atmosphere. Other turbofan engines duct the airflow to the exhaust section along the outside perimeter of the gas generator. The bypass air is then mixed directly with the exhaust gases of the generator. If desired, the combined gases can be used for afterburner operations to augment thrust (Figure 3.4-6).

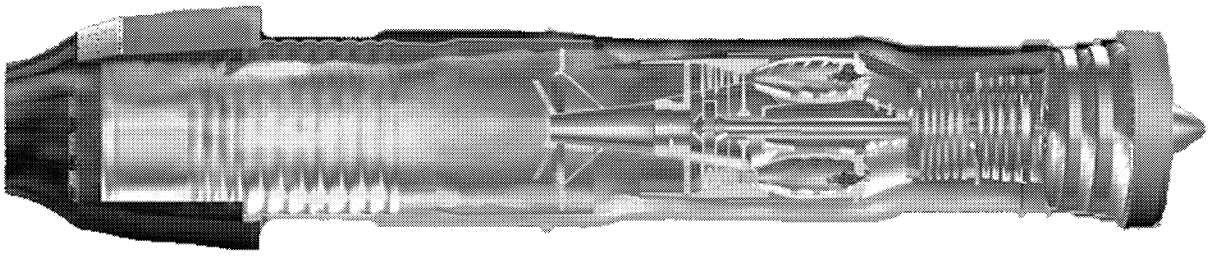

Figure 3.4-6 Turbofan

Characteristics of a Turbofan

Advantages	Disadvantages
1. Higher thrust at low airspeeds	1. Higher specific weight
2. Lower TSFC	2. Larger frontal area
3. Shorter takeoff distance	3. Inefficient at higher altitudes
4. Considerable noise reduction, 10 to 20 percent over the turbojet	

STUDY QUESTIONS

Turbojet and Turbofan Engines

1. What does the term "gas generator" mean?

2. How is a turbojet constructed?

3. How does a turbojet produce thrust?

4. What are the advantages and disadvantages of the turbojet?

5. How is a turbofan constructed?

6. How does a turbofan produce thrust?

7. How much thrust is produced by the fan on a turbofan?

8. What is meant by "bypass air?"

9. What are the advantages and disadvantages of the turbofan?

ASSIGNMENT SHEET

Turboprop and Turboshaft Engines
Assignment Sheet No. 3.5.1A

INTRODUCTION

This assignment sheet will aid the student in understanding turboprop and turboshaft engines.

LESSON TOPIC LEARNING OBJECTIVES

Terminal Objective:
Partially supported by this lesson topic:

3.0 Upon completion of this unit of instruction, the student will demonstrate knowledge of the fundamentals of power plants and associated accessory systems.

Enabling Objectives:
Completely supported by this lesson topic:

3.55 Describe the basic construction of a turboprop engine.

3.56 Explain how a turboprop produces thrust.

3.57 Define the major components of the propeller assembly.

3.58 Describe the purpose and operation of the reduction gear box used on a turboprop engine.

3.59 Describe the major components and their operation of the torquemeter assembly.

3.60 State the two main ways the propeller assembly may be connected to a gas generator.

3.61 Describe the operation and characteristics of a turboprop engine.

3.62 Describe alpha range and beta range operations of the propeller.

3.63 Describe the construction of a turboshaft engine.

3.64 Describe the operation of the free/power turbine section.

3.65 Explain how the turboshaft produces thrust.

STUDY ASSIGNMENT

Review Information Sheet 3.5.1I and answer the Study Questions.

INFORMATION SHEET

Turboprop and Turboshaft Engines
Information Sheet No. 3.5.1I

INTRODUCTION

Turbojet and turbofan engines were discussed in Lesson Topic 3.4. This lesson topic explores the construction and operation of the remaining gas turbine engines which are turboprops and turboshafts.

REFERENCES

1. NAVEDTRA 12000; Airman TRAMAN,1990
2. NAVEDTRA 12300; Aviation Machinist Mate 3 & 2, 1991
3. NAVEDTRA 10324-A; Aviation Machinist Mate 1 & C, 1984
4. CNAT P-301 "T-34C Aircraft Familiarization Workbook"

INFORMATION

TURBOPROP ENGINE

CONSTRUCTION

The turboprop engine couples a gas generator with a reduction gear box and propeller, which is driven by the turbine section (Figure 3.5-1). Turboprop engines combine the best qualities of a gas generator with the propulsive efficiency of a propeller.

The propeller, which provides the majority of the thrust, imparts a small amount of acceleration to a large mass of air (Figure 3.5-2).

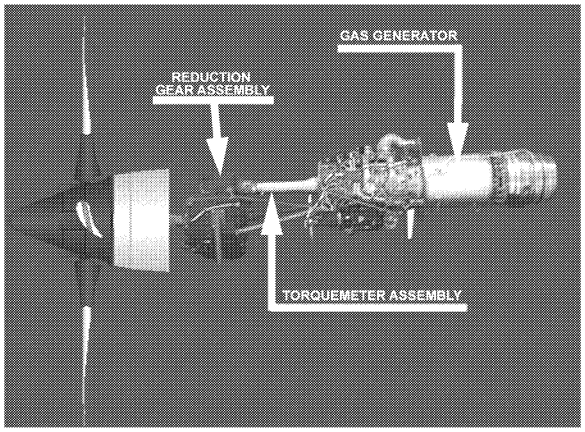

Figure 3.5-1 Turboprop Engine Assembly

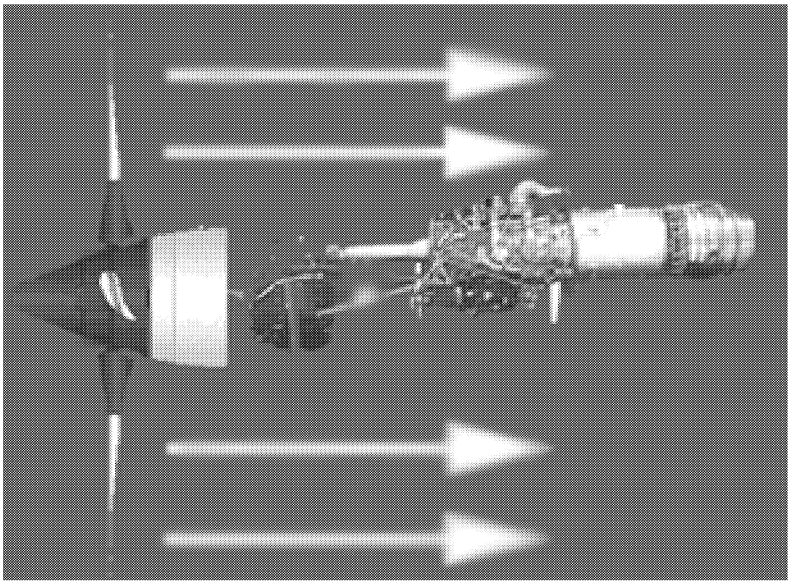

Figure 3.5-2

COMPONENTS

PROPELLER ASSEMBLY

A propeller assembly is essentially a "rotating wing" or airfoil. The propeller converts the power output of the engine into forward thrust to move the aircraft through the air. Many turboprop aircraft in the military will have a four-blade propeller made of aluminum or fiberglass (T-34C propeller has three-blades made of aluminum). These propellers are hydraulically controlled, constant speed, full-feathering, and reversible.

Remember that 75 percent of the heat energy from the burner is used to drive the compressor and accessories, leaving 25 percent to produce thrust. On most turboprop engines, 10 percent of the propulsive thrust of that 25 percent comes from the exhaust gases. <u>The majority of thrust, approximately 90 percent, is a result of the large mass being accelerated by the propeller</u>.

The major components of the propeller assembly are the **blades, hub, and pitch change/dome assembly** (Figure 3.5-3). The **blades** are installed into the hub (barrel assembly), and the **hub** is then attached to the propeller shaft. The **pitch change** / **dome assembly** is the mechanism that changes the blade angle of the

propeller. The blade angle is adjusted to vary the mass of airflow pushed by the propeller, which increases or decreases thrust.

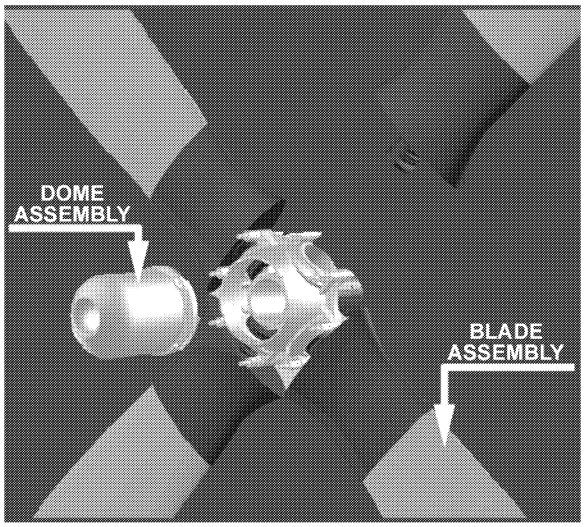

Figure 3.5-3 Propeller Assembly

REDUCTION GEAR BOX (RGB)

The **reduction gear box**, located between the propeller assembly and the gas generator, is basically a one-speed transmission (Figure 3.5-4). This assembly prevents the propeller blades from reaching supersonic speeds. It converts the high rpm and low torque of the gas generator to low rpm, high torque necessary for efficient propeller operation. Since the turboprop engine uses a propeller to accelerate subsonic airflow, it is important that the propeller and its blade tips do not approach or exceed supersonic speed. If the tips reached these high speeds, the blades would lose efficiency as they slipped through the compressible supersonic air stream. The ratio of reduction on some RGB's can be as high as 12:1 or 15:1. This reduction ratio is necessary because the gas turbine must operate at a very high rpm to produce power efficiently.

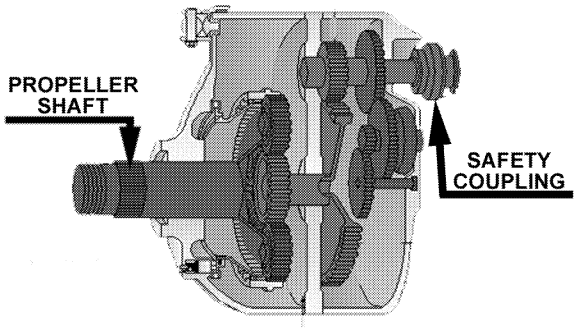

Figure 3.5-4 Reduction Gear Box

"The T-34 RGB contains a two-stage reduction gear system that reduces the power turbine rpm at 15:1 ratio. The propeller shaft is hollow to allow passage of high pressure oil for the propeller pitch control. A magnetic chip detector is located at the bottom of the RGB to provide the pilot with a warning signal for metal contamination in the oil and possible engine failure."

TORQUEMETER ASSEMBLY

The **torquemeter assembly** is a set of shafts located between the gas generator and reduction gear box. It is used on some turboprop engines, to transmit and measure the power output from the gas generator to the reduction gear box. The torquemeter operates on the principle of accurately measuring the torsional deflection (twisting movement) that occurs in any power-transmitting shaft, commonly called the torque shaft. This torsional deflection is detected by magnetic pickups. The slight twisting or deflection is measured electromagnetically and the information is displayed on the cockpit instrument panel in terms of inch-pounds of torque, or shaft horsepower.

The torque shaft and reference shaft are the major components of the torquemeter assembly. The torque shaft (inner shaft) is coupled to the compressor by the compressor extension shaft. The other end of the torque shaft is connected to the reduction gear box. This shaft carries the load from the propeller and produces the torsional deflection. The reference shaft (outer shaft) is rigidly connected to the torque shaft at the compressor extension shaft. The other end is not rigidly connected. The reference shaft does not twist and therefore provides the reference to the twisting torque shaft. (Figure 3.5-5).

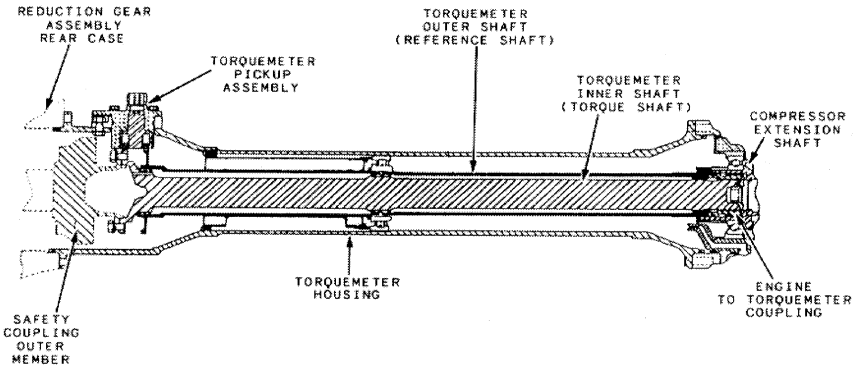

Figure 3.5-5 Torquemeter Assembly

The propeller assembly, the reduction gear box, along with the torquemeter assembly may be connected to the gas generator in two possible configurations: 1)

attached to the front of the compressor drive shaft or 2) attached to the free/power turbine as in Figure 3.5-6.

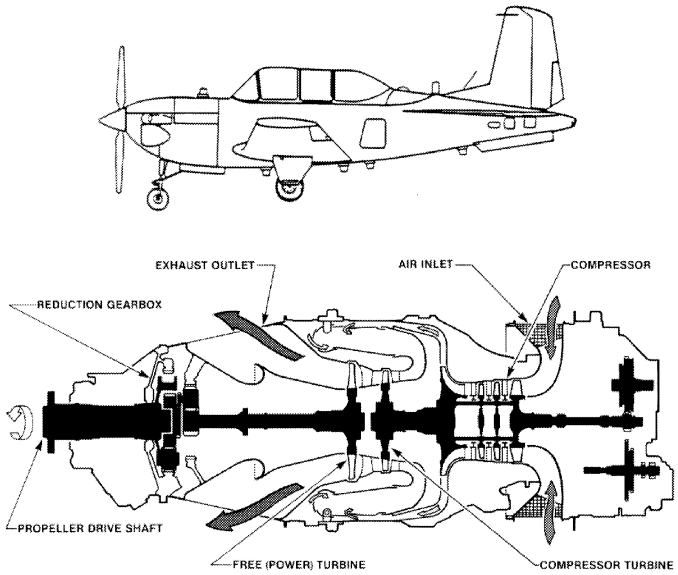

Figure 3.5-6 PT-6 Engine, T-34C

OPERATION

While the turbojet accelerates a relatively small mass of air to high speed, the turboprop accelerates a very large mass of air with its propeller to a moderate speed. During flight operation, the propeller assembly maintains the propeller at a constant 100 percent rpm. Changes in fuel flow directly affect power changes. An increase in fuel flow causes an increase in turbine temperature and a corresponding increase in energy available at the turbine. The turbine absorbs more energy and sends it to the propeller in the form of torque. The propeller, in order to absorb the increased torque, increases blade angle to maintain constant propeller rpm. These changes occur through coordination between the propeller governor and the turboprop engine fuel control unit. Together they establish the correct combination of rpm, fuel flow, and blade angle to create the thrust required.

The turboprop engine has two ranges of operation: Alpha and Beta**.** In the **alpha range**, also known as the flight range, the power control lever (PCL) can be positioned from flight idle to full power. In this range, the PCL sends signals to the Fuel Control Unit (FCU) for fuel flow. The FCU also works in conjunction with the prop governor (brain of the propeller assembly) to ensure a constant propeller RPM by adjusting the blade angle.

The **beta range** is only used during ground operations. In this range, the PCL can be positioned from flight idle to max reverse. The PCL is mechanically connected to the pitch change assembly as well as the FCU to allow the pilot direct control of blade angle. Reversing the airflow by reversing the blade angle decreases the landing distance of the turboprop and increases the aircraft's maneuverability during ground operations.

Characteristics of a Turboprop

Advantages	Disadvantages
1. Develops very high thrust at low airspeeds	1. Heavier and more complicated aircraft
2. Excellent take-off, slow speed, and low altitude characteristics	2. Limited speeds (approx. 400-450 kts.)
3. Superior for lifting heavy loads off short and medium length runways	

The actual percentage of thrust will vary with a host of factors, such as speed, altitude and temperature. The turboprop will deliver more thrust, up to medium speeds, than either the turbojet or turbofan (Figure 3.5-7). Also, as the turboprop climbs to higher altitudes, the mass of air being accelerated by the propeller decreases due to the decrease in air density (Figure 3.5-8).

When compared to the turbojet and turbofan, the turboprop has a lower TSFC because its thrust is produced by accelerating a large mass of air at low velocity for a relatively small amount of fuel. Examples of aircraft using turboprop engines are the P-3, C-130, T-44, T-34, C-2, and E-2.

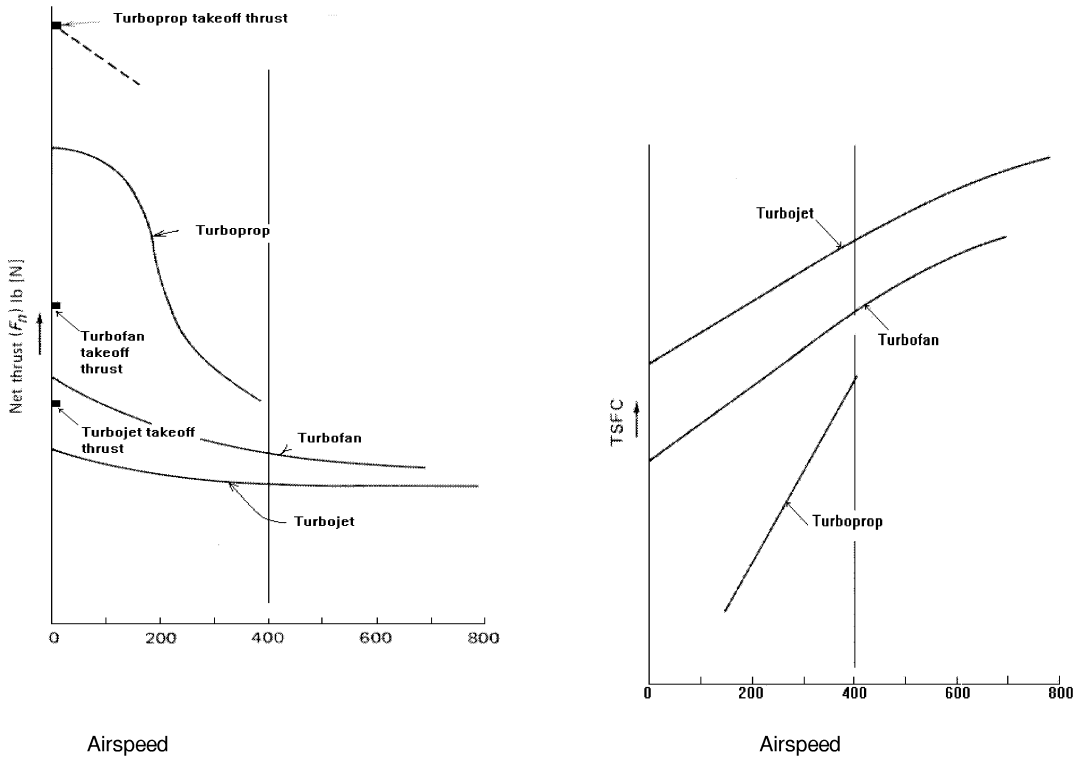

Figure 3.5-7 Thrust Comparison Graph

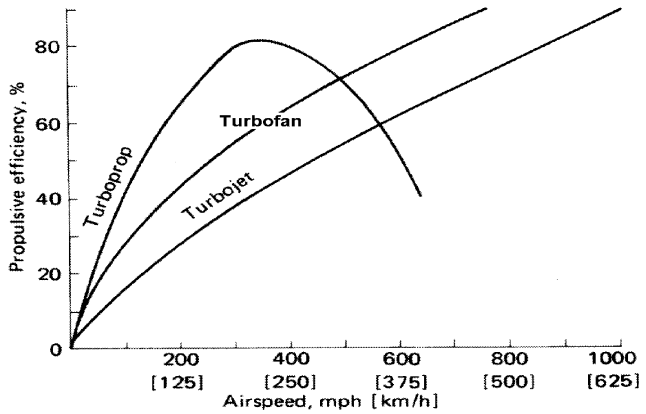

Figure 3.5-8 Thrust Efficiency Graph

TURBOSHAFT ENGINE

The turboshaft engine has many similarities to the turboprop engine. If, however, the shaft of a free turbine or power turbine is used to drive something other than an aircraft propeller, such as the rotor of a helicopter, the engine is called a turboshaft. Turboshaft engines with a transmission/reduction gear assembly are used to power ships, tanks, trains, etc.

CONSTRUCTION

This type of engine consists of two basic sections: the gas generator and the free/power turbine sections (Figure 3.5-9).

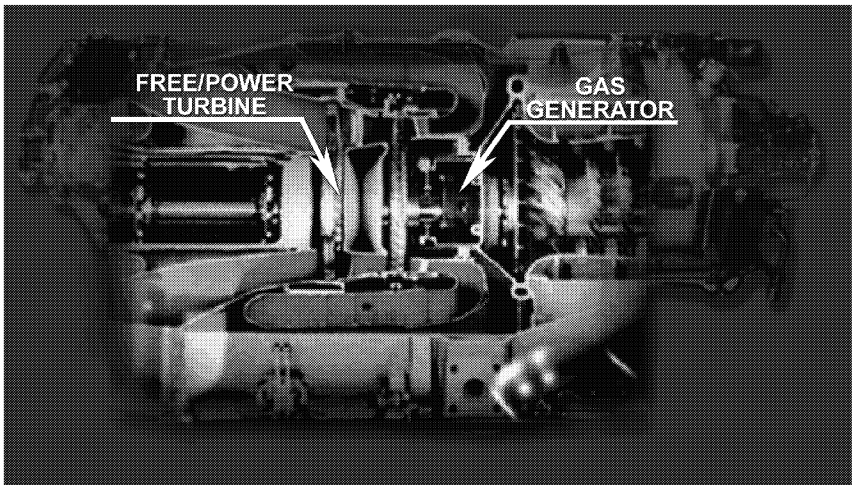

Figure 3.5-9 Turboshaft Engine

The **Free/Power Turbine** (**PT**) is mechanically independent from the gas generator. Exhaust gases from the gas generator turbine drive the power turbine. This power turbine is connected to the main transmission (reduction gear box) through a coaxial main drive shaft. The main drive shaft can be located on the rear or front of the engines.

OPERATION

The gas generator produces the hot gases required to drive the compressor, accessories, and the power turbine section. Seventy-five percent of the power produced is used to drive the compressor. In the turbojet, the remainder of the energy is dumped out the exhaust to produce jet thrust. This amount is reduced to 40-70 percent in the turbofan, and to 10 percent in the turboprop. <u>In the turboshaft, the propulsive energy from the exhaust is negligible; that is, all of the remaining energy is extracted by the free or power turbine to drive the rotor assembly</u>. Thus, in the turboshaft engine, virtually all of the pressure energy is converted into shaft horsepower.

STUDY QUESTIONS

Turboprop and Turboshaft Engines

1. Describe the basic construction of a turboprop engine.

2. What component produces the majority of thrust in a turboprop?

3. Why are reduction gears required in a turboprop?

4. How much thrust is produced from the exhaust gases of a turboprop?

5. What are the advantages and disadvantages of a turboprop in comparison with a turbojet?

6. How is a turboshaft constructed?

7. What is a free turbine?

8. Describe the sections of a turboshaft and its function.

9. What percentage of a turboshaft's thrust comes from the exhaust?

(This page intentionally left blank)

ASSIGNMENT SHEET

Hydraulic Systems
Assignment Sheet 3.6.1A

INTRODUCTION

This assignment will aid the student in understanding basic hydraulic theory and aircraft hydraulic systems.

LESSON TOPIC LEARNING OBJECTIVES

Terminal Objective:
Partially supported by this lesson topic:

3.0 Upon completion of this unit of instruction, the student will demonstrate knowledge of the fundamentals of power plants and associated accessory systems.

Enabling Objectives:
Completely supported by this lesson topic:

3.66 Explain Pascal's Law.

3.67 Define force, pressure, and area.

3.68 Explain how force, pressure, and area relate to hydraulic theory.

3.69 Explain the relationship between linear displacement and the change of force between the input and output pistons of a closed hydraulic system.

3.70 Explain why hydraulic systems are required on aircraft.

3.71 Describe the function of basic hydraulic components used on aircraft.

3.72 Describe the operation of a basic aircraft hydraulic system.

STUDY ASSIGNMENT

Review Information Sheet 3.6.1I and answer the Study Questions.

INFORMATION SHEET

Hydraulic Systems
Assignment Sheet 3.6.1I

INTRODUCTION

Hydraulic systems are used in military aircraft to provide extra power and mechanical advantage in various aircraft components. Hydraulic system operation is similar to the workings of the power steering or power brake system in an automobile. The force that is inputted by an aviator is multiplied and then applied. This force is applied to the operation of flight controls, landing gear, wing or rotor fold systems and bomb bay doors, and many other components.

REFERENCES

1. NAVEDTRA 10492; Nov 1989
2. NAVEDTRA 12313; Mar 1991
3. 19 AF Student Guide P-V4A-A/B/J-AB-SG, “T-37 Systems”

INFORMATION

BASICS

Hydraulics is the practical application of the energy produced by liquids in motion. The foundation for modern hydraulic theory is the scientific investigations of Blaise Pascal. **Pascal’s Law** states: Pressure applied to a confined liquid is transmitted equally in all directions without the loss of pressure and acts with equal force on equal surfaces. The shape of the container holding the liquid has no effect on the pressure or force relationships.

FORCE AND PRESSURE

Before proceeding with the application of Pascal's Law to a typical hydraulic system, a distinction must be made between the terms force and pressure. Force is simply a push or pull. This push or pull exerted against the total area of a particular surface defines the force produced in a hydraulic system and it is expressed in pounds. **Pressure** is the amount of force per unit area. Typically in a hydraulic system, the unit area is a square inch. Thus, pressure is the force acting upon one square inch of area (PSI).

When a force is applied to the end of a column of liquid, the force is transmitted in every direction throughout the column. The containing vessel is literally filled with pressure (Figure 3.6-1).

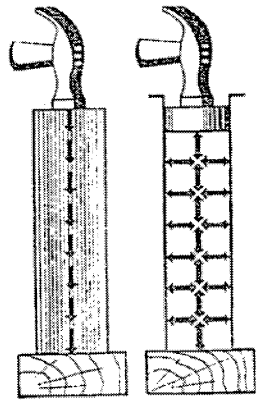

Figure 3.6-1 Force

Since pressure is the amount of force acting on a unit area, a formula for computing pressure may be written as: P=F/A. Where P represents pressure, F represents force applied and A represents total area. This formula may be rewritten as F=PxA, to compute force, or A=F/P, to compute total area.

PRESSURE AND FORCE IN FLUID POWER SYSTEMS

When a force is applied to the end of a column of confined liquid, pressure is transmitted straight through to the other end equally and undiminished. Notice in Figure 3.6-2 that two pistons are incorporated in the system. Force is being applied to the input piston (1). If there is a resistance on the output piston (2) and the input piston is pushed downward, a pressure is created through the fluid, which acts equally at right angles to surfaces in all parts of the container.

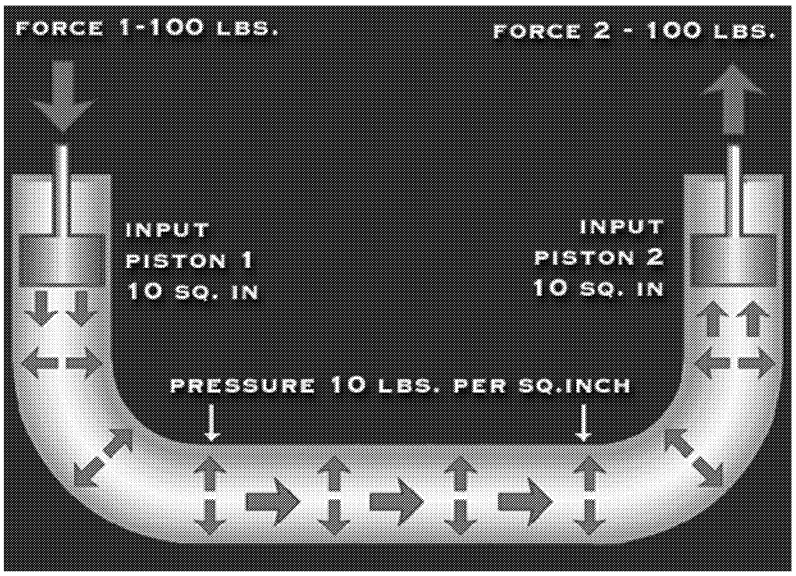

Figure 3.6-2 Pascal's Law

If the input force is 100 pounds and the area of the input piston (1) is 10 square inches, then the pressure in the fluid is 10 pounds per square inch (PSI).

The pressure acts on piston (2) so that each square inch of area is pushed upward with a force of 10 pounds. In this case, a fluid column of uniform cross section is considered so that the area of the output piston (2) is the same as the area of the input piston (1), or 10 square inches. Therefore, the upward force on the output piston (2) is 100 pounds, the same as was applied to the input piston (1). All that has been accomplished in this system was to transmit the 100-pound force around a bend. However, this principle underlies practically all mechanical applications of fluid power. At this point it should be noted that since Pascal's Law is independent of the shape of the container, the tube connecting the two pistons does not require the same cross-sectional area as the pistons. A connection of any size, shape or length will do, so long as an unobstructed passage is provided.

When a system contains input and output pistons of equal area, the output force is equal to the input force. Consider the situation in Figure 3.6-3, where the input piston is much smaller than the output piston. The area of the input piston (1) is two square inches. A downward force of 20 pounds acting on piston (1) creates a pressure of 10 PSI in the fluid. This pressure of 10 PSI acts on all parts of the fluid container, including the bottom of the output piston (2). The upward force on the output piston (2) is, therefore, 10 pounds for each of its 20 square inches of area, or a total of 200 pounds (10x20). In this case, the original force has been multiplied tenfold. The system works in a similar manner in reverse. Consider piston (2) as the input and piston (1) as the output. Then, the output force is one-tenth the input force.

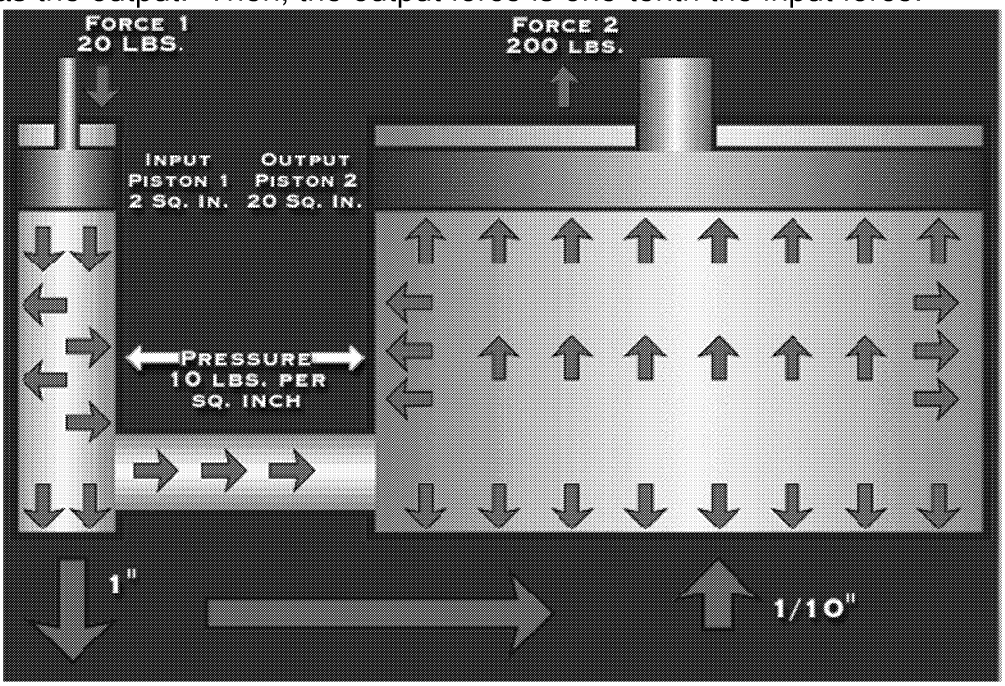

Figure 3.6-3 Hydraulic Example

In this example, the output force was multiplied ten times; however, in order to gain this force, something must be exchanged for this gain. Linear displacement or distance traveled is exchanged for the change in force. If the input distance is 1 inches, then the output distance is 1/10 inch. Notice in figure 3.6-3 that the linear displacement is inversely proportional to the multiplied force.

AIRCRAFT HYDRAULIC SYSTEMS

The main purpose of a hydraulic system is to multiply force. This is particularly necessary in today's military aircraft. All modern aircraft contain hydraulic systems for the operation of various mechanisms. A complete aircraft hydraulic system consists of a power system and any number of actuating subsystems. The number of actuating systems depends on the requirements of the specific aircraft concerned. An aircraft with a dozen or more hydraulically operated subsystems is not unusual.

The power system is generally considered to include the fluid supply (reservoir), power supply (pump) and all other components leading up to, but not including, the selector valves. The selector valves direct the flow of fluid to various actuating units. Each selector valve is considered part of its related actuating system. The operating hydraulic pressure is quite high for most military aircraft. Many hydraulic systems operate near 3,000 PSI.

Current aircraft hydraulic system specifications require two separate systems for operating the flight controls. All aircraft which utilize hydraulically actuated flight controls have at least two hydraulic power systems, one which supplies fluid pressure to the flight controls only, and another which supplies fluid pressure to the utility systems in addition to the flight controls. The utility system operates the landing gear, wing fold, wheel brakes and other such units. Most manufacturers refer to the systems supplying pressure only for the flight controls as the power control systems.

If there are three hydraulic power systems, they are designated Power Control System 1 (PC-1), Power Control System 2 (PC-2) and the Utility System. Each system is equipped with its own reservoir, pump and distribution lines.

There are several components common to most hydraulic systems. These are illustrated in Foldout 3.6-1, which represents a typical hydraulic power system and one actuating subsystem. This foldout is located at the end of this lesson and should be opened during the presentation of this lesson.

SYSTEM COMPONENTS

RESERVOIR

The reservoir (see Foldout 3.6-1) has several functions. Primarily, it is a storage tank for the hydraulic fluid required in the system. This tank replenishes any lost fluid through leakage. A reservoir can also serve as an overflow basin for excess hydraulic fluid forced out of the system by thermal expansion, allow air bubbles to be purged, and separate some foreign matter from the system.

Nonpressurized reservoirs are vented to the ambient air to prevent a vacuum from being formed as the fluid level in the reservoir decreases. These reservoirs are used in several utility, cargo, and patrol aircraft that are not designed for violent maneuvers. Some of these aircraft don't fly at high altitudes. If the aircraft with a non-pressurized reservoir is designed to fly at higher altitudes, the reservoirs are installed within a pressurized area such as a cargo bay (Figure 3.6-4).

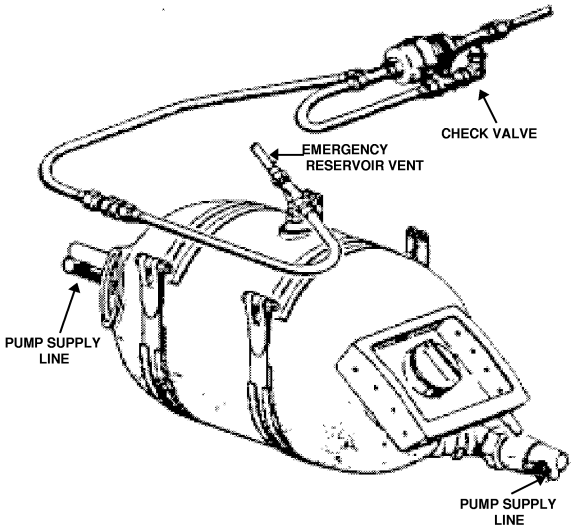

Figure 3.6-4 Nonpressurized Reservoir

The reservoir on high performance aircraft or aircraft that normally fly at high altitudes is normally pressurized. These **pressurized reservoirs** (Figure 3.6-5) are pressurized by bleed air from the compressor or by hydraulic system pressure. This pressurization ensures positive fluid flow for any aircraft attitude.

The pressurized reservoir is cylindrical in shape and has a piston installed internally to separate the air and fluid chambers. During normal operation, the pressurizing air source comes from engine bleed air.

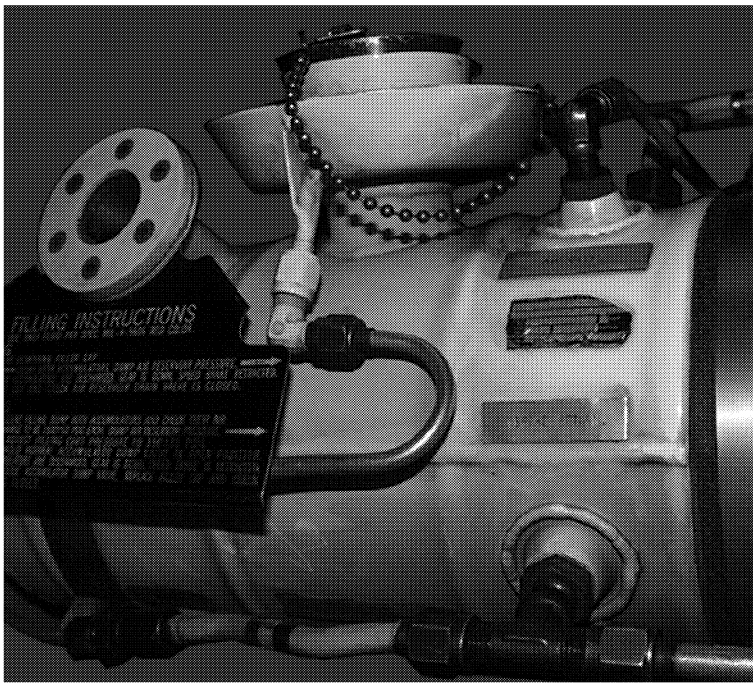

Figure 3.6-5 Pressurized Reservoir

PUMPS

Hand pumps are used in hydraulic systems to supply fluid under pressure to subsystems such as the landing gear, flaps, canopy, cargo doors, bomb bay doors, and to charge brake accumulators. Systems using hand pumps are normally classified as emergency systems.

Power pumps (Figure 3.6-6) are normally driven by the engine but may be electric-motor driven. They either displace a variable amount of fluid or a constant amount of fluid. The **variable displacement pump** regulates volume delivery in accordance with system flow demands. The rate of flow from the pump is regulated automatically through the use of an integral control in each pump housing which varies the volume of fluid while maintaining a near constant pressure.

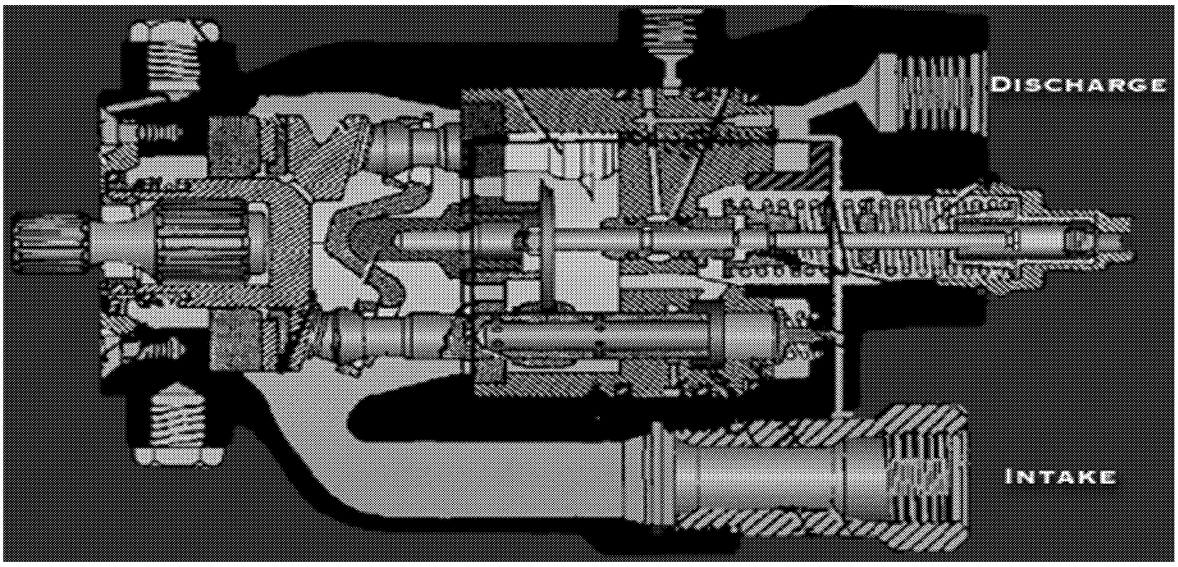

Figure 3.6-6 Pump

A **constant displacement pump** delivers a constant fluid output for any given rotational speed. Once on line, the pump output remains the same, regardless of system pressure. For this reason, systems that are powered by a constant displacement pump must incorporate a pressure regulator or unloader valve.

PRESSURE REGULATOR / UNLOADER VALVE

The **pressure regulator** or **unloader valve** (see Foldout 3.6-1)always works in conjunction with the constant displacement pump. The pressure regulator valve will maintain a set pressure in the system by diverting excess pump flow back to the reservoir. The unloading valve, however, will divert all pump flow back to the reservoir when the preset system pressure is reached. This condition remains in effect until further demand is placed on the system.

CHECK VALVE

A **check valve** (see Foldout 6.3-1) allows one-way flow in a hydraulic system. It allows the free flow of hydraulic fluid from the pumps, but prevents back flow of system pressure. The check valve works in conjunction with the accumulator to maintain system pressure during shutdown. Another location for a check valve is in the return line directing flow back to the reservoir. In the event of a pump failure, partial system pressure is maintained by the check valve. Figure 3.6-7 is an example of a check valve.

ACCUMULATOR

The accumulator serves several purposes in a hydraulic system. It serves as a cushion, or shock absorber, by absorbing pressure surges in the system (such as engine shut-down or actuator operation). It supplements the pump's output when the pump is under peak load by storing energy in the form of fluid under pressure. Finally, it stores enough fluid under pressure to provide for emergency operation of certain actuating units. The accumulator is designed with a compressed air or nitrogen chamber which is separated from the hydraulic fluid by a flexible diaphragm, synthetic rubber bladder or movable piston (Figure 3.6-8).

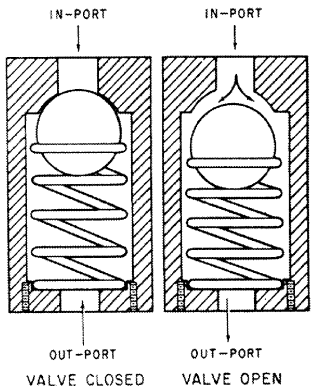

Figure 3.6-7 Check Valve

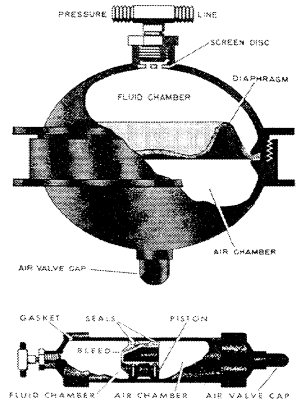

Figure 3.6-8 Accumulators

FILTERS

Filters ensure delivery of contaminant free hydraulic fluid by preventing dust, grit and undesirable impurities from entering the system. They may be located within the reservoir, the pressure line, the return line, or any location where they are needed to safeguard the system from contamination.

Figure 3.6-9 shows a hydraulic filter assembly incorporating a differential pressure indicator. This indicator provides a means of monitoring the condition of the filter element.

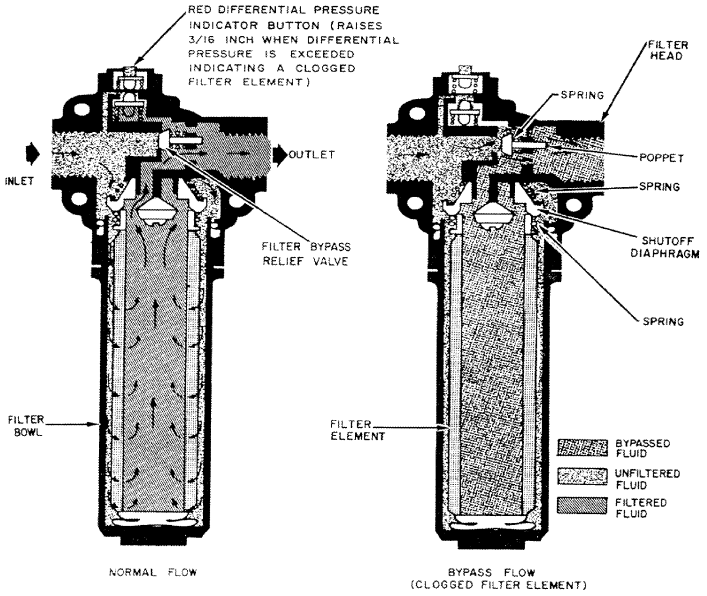

Figure 3.6-9 Hydraulic Filter

RELIEF VALVES

Relief valves (see Foldout 3.6-1) are simply a pressure limiting device. It is a safety valve that is installed in the system to prevent pressure from building up to a point where seals might burst or damage may occur to the system.

PRESSURE GAUGE

Pressure gauges (see Foldout 3.6-1) indicate the amount of pressure in the hydraulic system.

PRESSURE SWITCHES

Pressure switches (see Foldout 3.6-1) are used to indicate a hydraulic pressure drop that falls below allowable limits. When the pressure has dropped excessively, an electrical circuit will be completed and a warning light will illuminate in the cockpit. These switches are located in the lines leading from the pump.

HYDRAULIC FUSES

Hydraulic fuses (see Foldout 3.6-1) are safety devices that are installed at strategic locations throughout a hydraulic system. They are designed to detect or gauge ruptures, failed fittings, or other leak-producing failures or damage. If a leak

develops in a subsystem while the aircraft is flying, or if a hydraulic line is shot away during combat, a fuse prevents excessive loss of fluid yet it permits the operation of the remaining subsystem. (Figure 3.6-10).

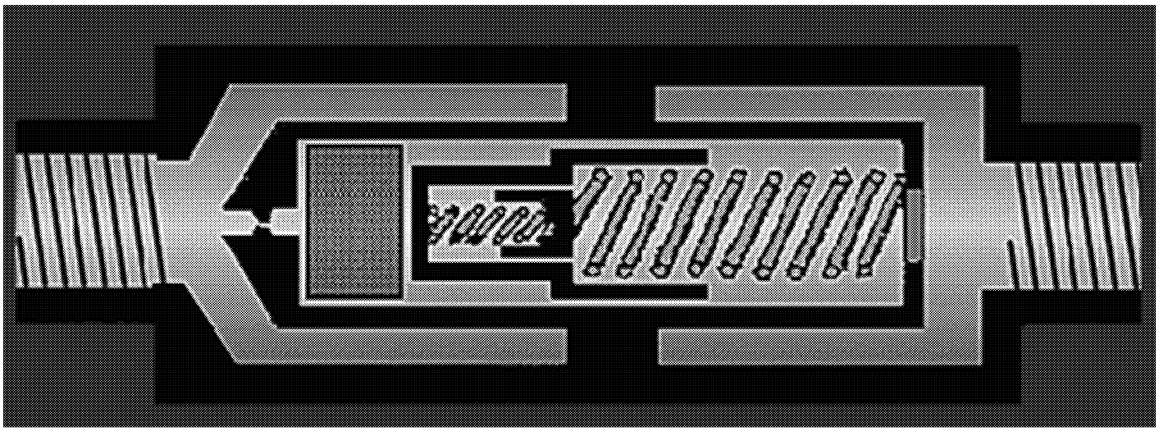

Figure 3.6-10 Hydraulic Fuse

SELECTOR CONTROL VALVES

Selector control valves are used in a hydraulic system to direct the flow of fluid. It directs fluid under pressure to the desired working port of an actuating unit (actuator). At the same time, the selector valve directs the return fluid from the opposite working port of the actuator to the reservoir.

ACTUATORS

Actuators (see Foldout 6.3-1) convert fluid under pressure into linear or reciprocating mechanical motion. Actuating cylinders are generally installed with the cyliner's piston shaft (rod) end attached to the mechanism to be actuated and the other end attached to the aircraft structure.

STUDY QUESTIONS

Hydraulic systems

1. What is Pascal's Law?

2. What is the output pressure of most aircraft hydraulic systems?

3. What do hydraulic systems multiply?

4. The force multiplication achieved in a hydraulic system is accomplished by a decrease in _____ movement.

5. What are the two types of power pumps used to generate fluid pressure in hydraulic systems?

6. What are the functions of the reservoir?

7. What does the pressure regulator or unloader valve do during normal operation?

8. What is the purpose of the accumulator?

9. What is the function of the check valve?

10. What is the purpose of the selector valve?

11. Why is a relief valve included in a hydraulic system?

12. Changing the position of the selector valve will have what effect on the movement of fluid in the system?

13. What is the purpose of the hydraulic fuse?

14. What is the purpose of the actuating cylinder?

(This page intentionally left blank)

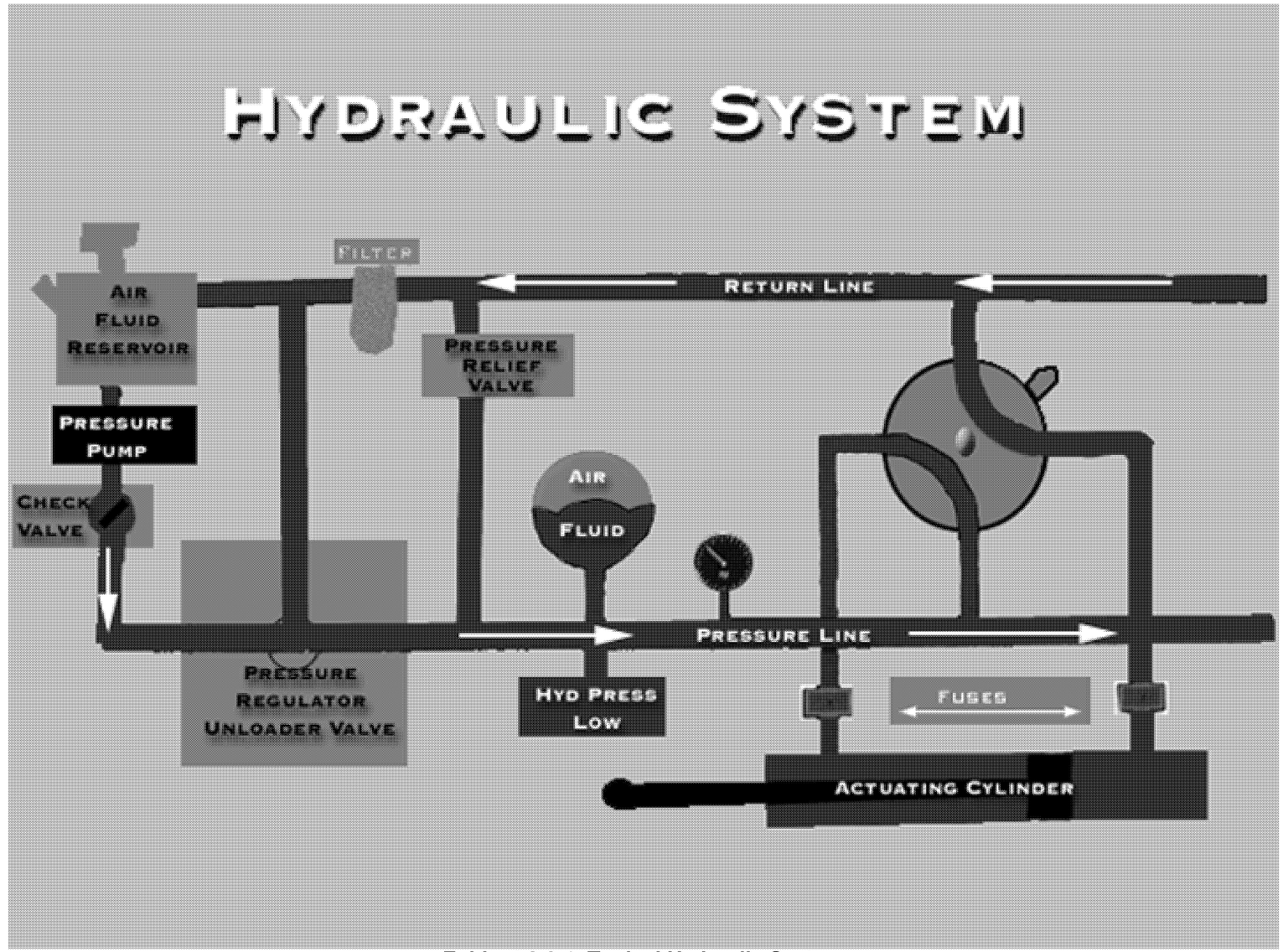

Foldout 3.6-1 Typical Hydraulic System

ASSIGNMENT SHEET

Electrical Systems
Assignment Sheet 3.7.1A

INTRODUCTION

The purpose of this assignment sheet is to aid the student in understanding aircraft electrical systems.

LESSON TOPIC LEARNING OBJECTIVES

Terminal Objective:
Partially supported by this lesson topic:

3.0 Upon completion of this unit of instruction, the student will demonstrate knowledge of the fundamentals of power plants and associated accessory systems.

Enabling Objectives:
Completely supported by this lesson topic:

3.73 Describe two forms of electricity.

3.74 Explain why AC electrical systems are preferred over a DC system.

3.75 Explain the function of aircraft electrical system components.

3.76 Describe the electrical distribution network.

3.77 Describe the operation of a basic aircraft electrical system.

STUDY ASSIGNMENT

Review Information Sheet 3.7.1I and complete the Study Questions.

INFORMATION SHEET

ELECTRICAL SYSTEMS
Information Sheet 3.7.1I

INTRODUCTION

Electricity is an essential requirement for the normal operation of today's aircraft. This lesson topic will discuss the basic means by which electricity is produced, distributed, and controlled. The electrical system shown in Figure 3.7-3 will be used as a typical example. The flow of electricity will be traced from it's primary source, i. e. generators, through the distribution networks, commonly known as "buses", which serve the needs of the aircraft Electrical System. Foldout 3.7-1 illustrating the electrical system is located at the end of this lesson and should be open during the presentation of this lesson.

REFERENCES

1. NAVEDTRA 12000; Airman TRAMAN, 1990
2. NAVEDTRA 10348; Aviation Electrician Mate 3 & 2, 1991
3. NAVEDTRA 10366; Aviation Electrician Mate 1 & C, 1988
4. NAVAIR 01-T34AAC-1, NATOPS Flight Manual

INFORMATION

ELECTRICAL ENERGY

Electricity is used in today's aircraft for many purposes. It powers everything from basic flight instrumentation to sophisticated weapon delivery systems. To cover the broad spectrum of power requirements, two forms of electricity are usually required: alternating current (AC) and direct current (DC).

AC is a form of electricity that reverses its direction. It is used in our homes. DC is a form of electricity that flows in one direction. It is used in our cars, boats and even small electrical devices such as our watches.

The components of a DC system are very heavy compared to their relative power outputs. They are often not reliable, and they increase maintenance.

Most modern military aircraft primarily use AC-powered components. AC power requires less current because of higher voltage and a ground neutral system. This allows the use of smaller aircraft wiring and therefore, less weight. In addition, AC

generators along with many system's control and protection components are lighter. They have also been proven reliable. Thus, AC components are lightweight, simple and reliable.

ELECTRICAL SOURCE COMPONENTS

ALTERNATING CURRENT	DIRECT CURRENT
A/C GENERATOR \ ALTERNATOR	D/C GENERATOR
INVERTER	TRANSFORMER-RECTIFIER
	BATTERY

Table 3.7-1

GENERATORS

Generators are often used as the main source for either AC or DC power (Figure 3.7-1). A Generator is a device that transforms mechanical energy (input) into electrical energy (output). The generator's large capacity enables it to serve as the main source of electrical energy in most of today's aircraft. The exact nature of the generator's output, AC or DC, depends on the internal construction of the generator. Normally, DC generators are simply referred to as generators while AC generators are referred to as an "alternator."

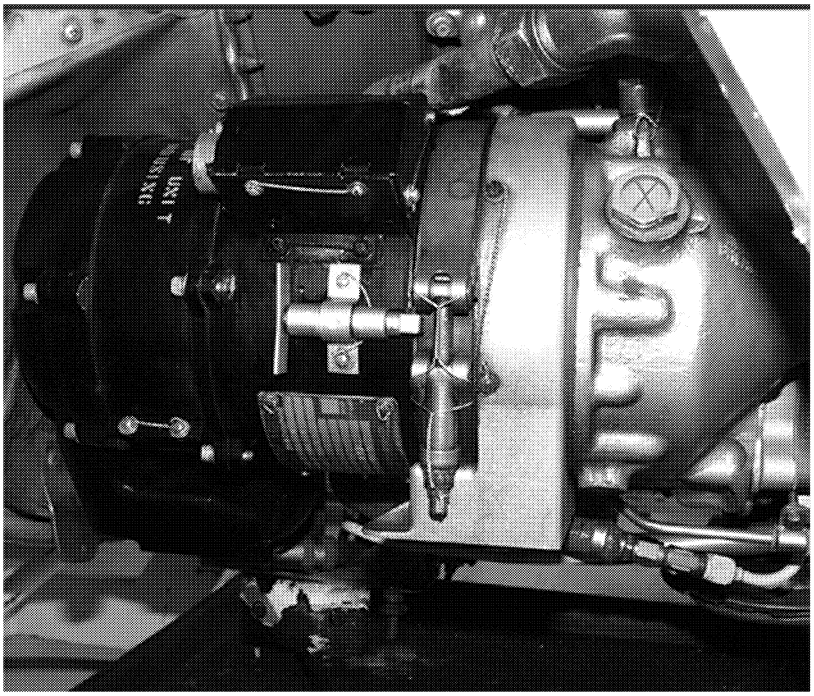

Figure 3.7-1 Typical Aircraft Generator

CONSTANT SPEED DRIVE

One method to ensure a constant input rpm is through the use of a hydro-mechanical linkage between the engine and the generator. This linkage is commonly referred to as a **constant speed drive (CSD)**. An important requirement of the generator is a constant rotational input speed regardless of engine RPM. This ensures a steady voltage output to supplied equipment.

The electric generator is mechanically coupled to the gas turbine engine's accessory drive section. This accessory drive section is driven by the gas turbine engine which the rpm is rarely constant.

INVERTER

An **inverter** (Figure 3.7-2) is an electro-mechanical device that transforms direct current into alternating current. On DC electrical systems, inverters are used to power AC equipment. On an aircraft with an AC system, the inverter is primarily used as a backup means of providing alternating current from the battery should the AC generator fail.

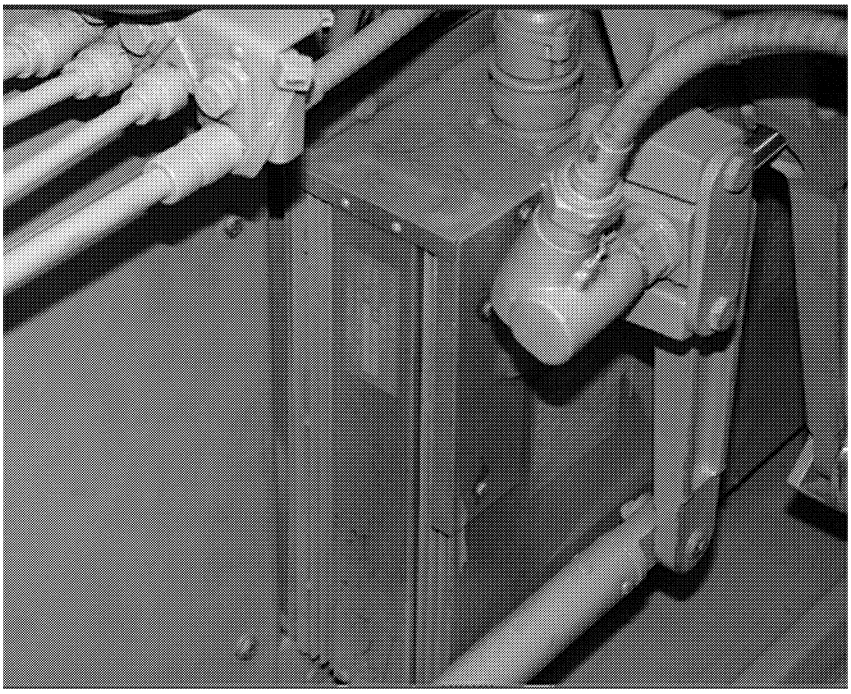

Figure 3.7-2 Inverter

TRANSFORMER RECTIFIER

A **transformer rectifier (TR)** (Figure 3.7-3) is an electrical device which transforms AC power into DC power. It provides high reliability and ruggedness unmatched by most other avionics equipment. The rectifier's DC current capability is high and is largely dependent on the cooling ability of its fan.

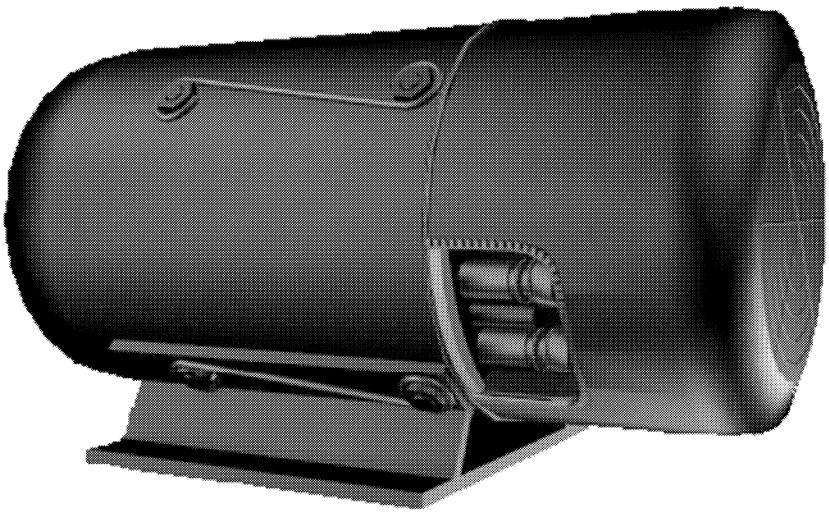

Figure 3.7-3 Transformer Rectifier

BATTERY

The **battery** (Figure 3.7-4) provides direct current power. <u>This DC voltage is primarily used as a source of emergency power should the generators fail and also for starting the aircraft's engines.</u>

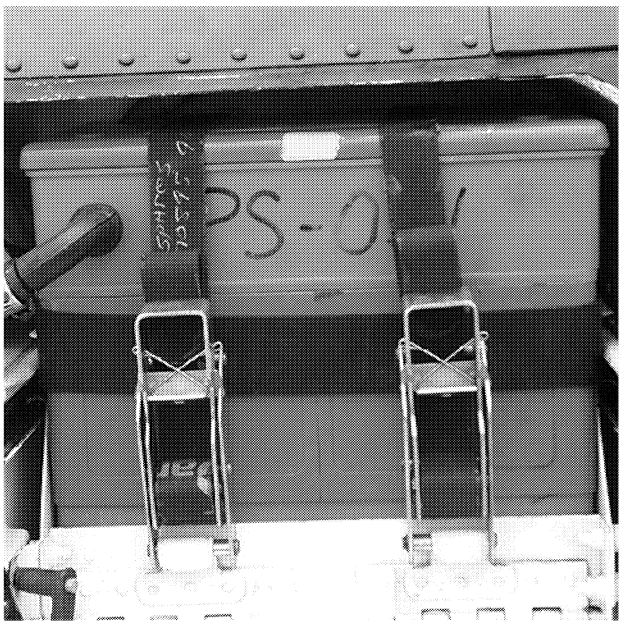

Figure 3.7-4 Battery

ELECTRICAL SYSTEM

DISTRIBUTION NETWORKS (BUSES)

Providing the medium or path between the energy sources and their respective electrical load is the "**bus**" or distribution network (see Foldout 3.7-1). An electrical bus is a common distribution point for electricity. It is similar to a circuit breaker panel in a house or the cables on a computer. The electrical distribution system in an aircraft provides the various electrical components with their power requirements through several buses. The buses are designed so that the equipment attached to a particular bus has similar power requirements and impact on flight safety. In the event of a partial electrical failure, electrical power can be supplied or diverted to the most important components. Titles may vary among aircraft but they usually serve the same purposes:

Types of electrical buses:

a. **Essential bus** - routes power to equipment required for flight safety (i,e., primary attitude gyro).
b. **Primary bus** - routes power to equipment devoted to the aircraft's intended mission (i.e., radar).
c. **Monitor or secondary bus** - routes power to convenience circuits, e.g., cabin lighting.
d. **Starter bus** - routes power to start the aircraft's engines.

SWITCHES CIRCUIT BREAKERS AND FUSES

Every electrical system must have a means to control power or to interrupt power during an emergency. Switches, fuses, and circuit breakers are used to provide manual and/or automatic control over the flow of electrical power.

Switches (Figure 3.7-5) provide manual control of power. Located in the cockpit, they energize or de-energize a system at the aircrew's option. Anti-ice, cockpit lights, and radios are a few examples of components that utilize cockpit switches.

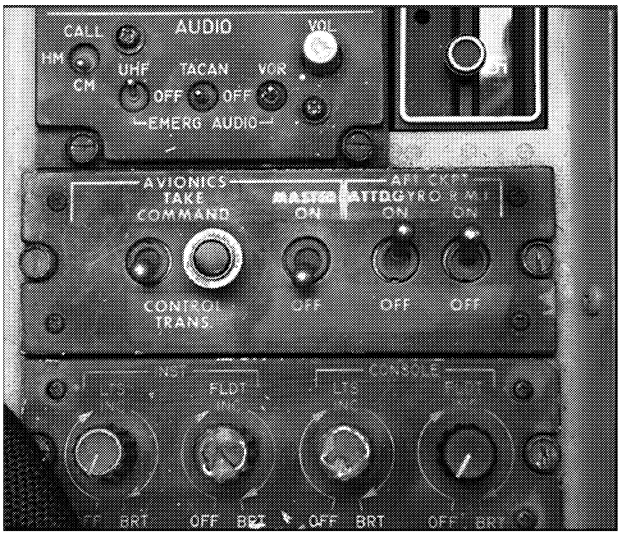

Figure 3.7-5 Switches

Circuit breakers (Figure 3.7-6) provide a means to manually or automatically interrupt power. In an abnormal electrical situation such as an ‘overload’ or a short in the circuit (wires), circuit breakers automatically open ("pop out"), de-energizing the circuit which prevents damage to the component or the electrical system. It can also provide a manual control of electrical power to various components in case of troubleshooting, or replacement of components. Circuit breakers are located throughout the aircraft, including the cockpit.

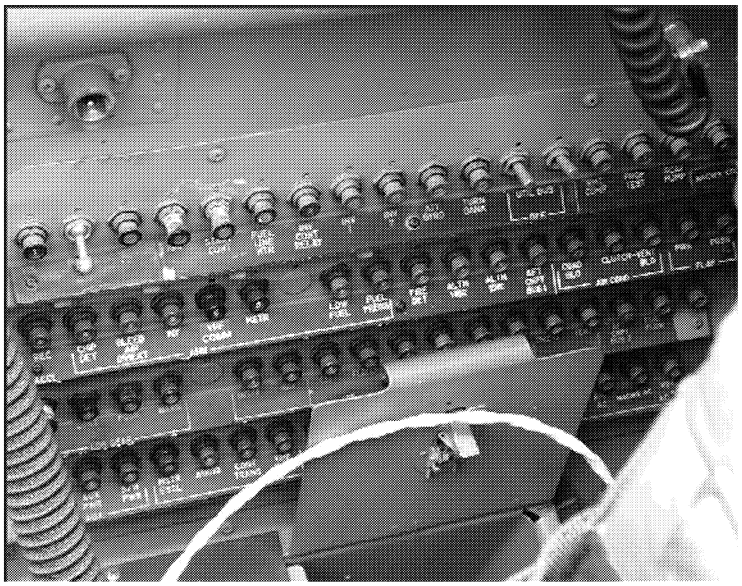

Figure 3.7-6 Circuit Breakers

Fuses provide automatic circuit protection should an over-load or an excessive amount of current is flowing through the system or to a component.

WARNING LIGHTS

Warning Lights signal system malfunctions to the aircrew. The action required by the aircrew could range from simply monitoring the fault, to preparing for possible ejection if the situation cannot be remedied. The master caution panel provides the pilot with a centralized warning center which monitors functions associated with many systems pertinent to flight safety. For example, if a generator failure occurs, the appropriate warning light in the panel will light up.

OTHER POWER SOURCES

APU

On many aircraft, an **Auxiliary Power Unit (APU)**, a small, independent gas-turbine engine, provides power through a driveshaft to a gearbox that turns a backup generator. Through this generator, the APU provides electrical power and frees an aircraft from being depend on external power. The APU can also ensure aircraft power when the engine-driven generators are not operating or fail. With an APU, an aircraft does not require the use of ground power units to carry out its mission (Figure 3.7-7).

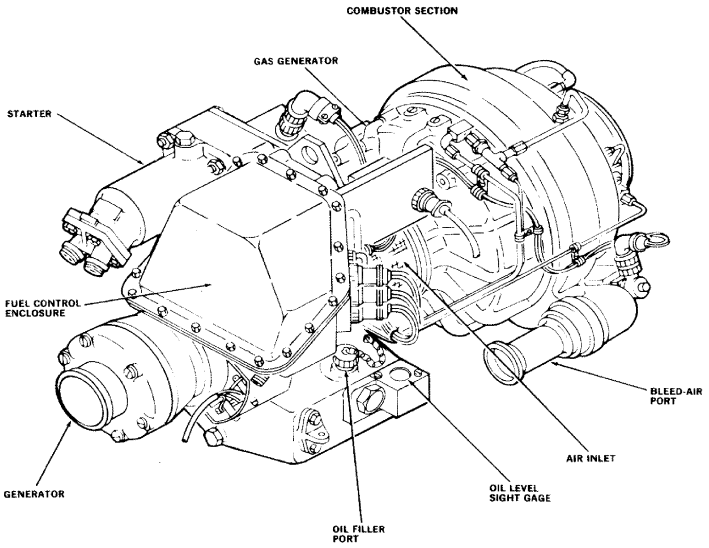

Figure 3.7-7 SH-60B Auxiliary Power Unit

GROUND SUPPORT EQUIPMENT

Support Equipment (SE) are used for an external source of electricity. These support equipment supply regulated electrical power for aircraft servicing, starting, maintenance, and testing on the ground. Some supply DC power only, while others furnish both DC and AC power.

STUDY QUESTIONS

Electrical Systems

1. What are the two types of electric current?

2. What components supply AC power?

3. Transformer rectifiers produce what type of electric current?

4. What provides a constant rotational input to the generator regardless of engine rpm?

5. Generators can provide what type(s) of power?

6. If equipped , what does an APU provide?

7. What bus provides power to safety of flight components?

8. Distribution of electrical energy is accomplished by a _____ system.

9. Name the four types of busses and the type of equipment that is supplied power.

10. What provides an automatic means of interrupting electrical power? A manual method?

11. What signals a system malfunction?

12. What is the main provider of power to the AC busses?

13. With the main generator failure, what bus or busses will stay on the line?

14. What provides power to the start bus?

15. What bus charges the battery?

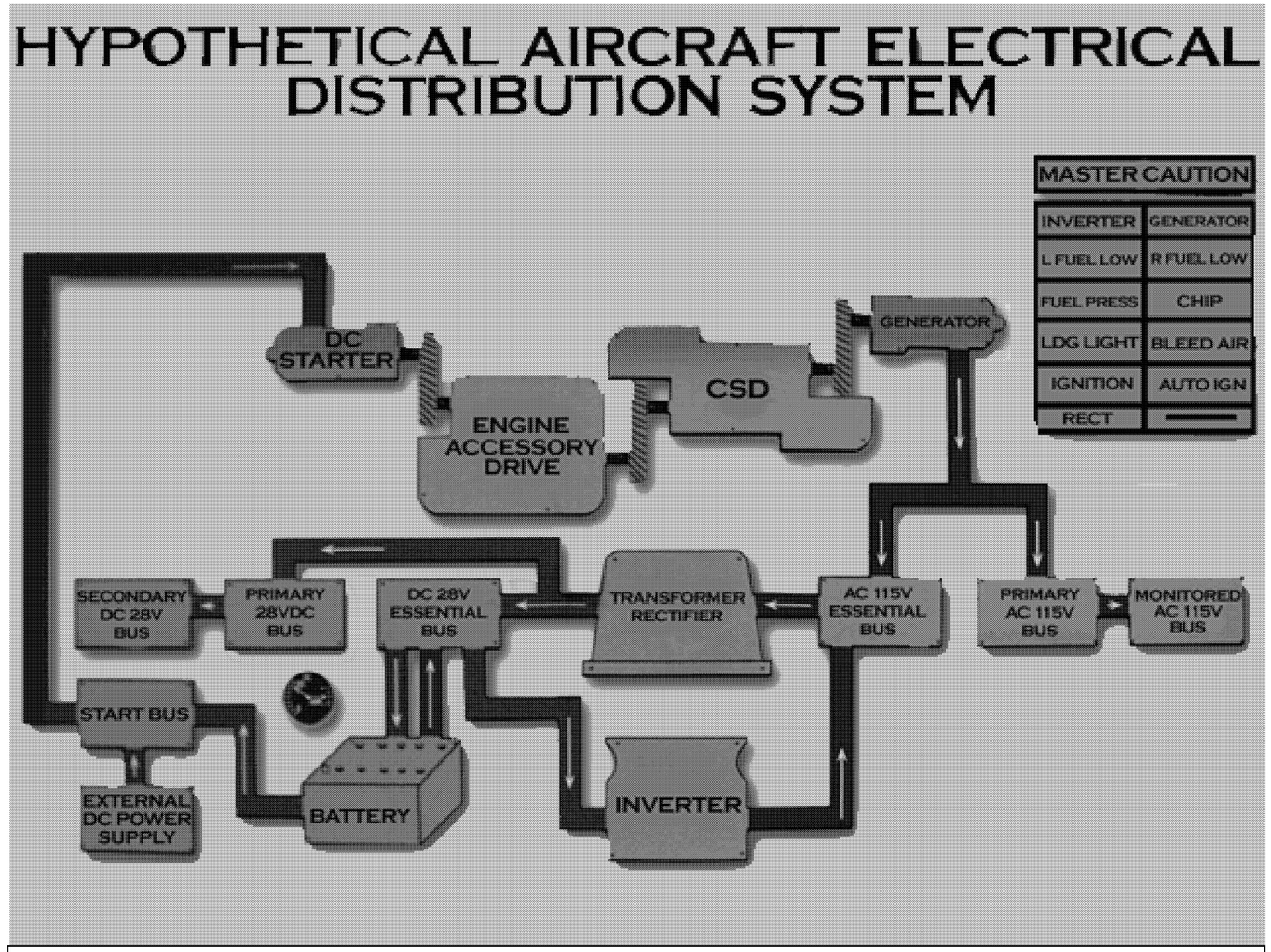

Foldout 3.7-1 Typical Electrical System

ASSIGNMENT SHEET

Fuel Systems
Assignment Sheet 3.8.1A

INTRODUCTION

The purpose of this assignment sheet is to aid the student in understanding fuels and fuel systems.

LESSON TOPIC LEARNING OBJECTIVES

Terminal Objective:
Partially supported by this lesson topic:

3.0 Upon completion of this unit of instruction, the student will demonstrate knowledge of the fundamentals of power plants and associated accessory systems.

Enabling Objectives:
Completely supported by this lesson topic:

3.78 Define volatility and flashpoint.

3.79 Describe the relationship between temperature, volatility, and flashpoint.

3.80 State the characteristics of common military aviation fuels.

3.81 Describe the function of the aircraft fuel system components.

3.82 Explain the operation of an afterburner fuel system.

3.83 Explain the operation of an afterburner fuel control unit.

3.84 Describe the three types of thrust ratings

STUDY ASSIGNMENT

Review the Information Sheet 3.8.1I and complete the Study Questions.

INFORMATION SHEET

Fuel Systems
Information Sheet 3.8.1I

INTRODUCTION

A basic understanding of the characteristics of aviation fuels and the operation of aircraft fuel systems is an important tool for the student of aviation.

REFERENCES

1. NAVEDTRA 12000; Airman TRAMAN, 1990
2. NAVEDTRA 12300; Aviation Machinist Mate 3 & 2, 1991
3. NAVEDTRA 10324-A; Aviation Machinist Mate 1 & C, 1984
4. CNAT P-301 "T-34C Aircraft Familiarization Workbook”

INFORMATION

FUEL CHARACTERISTICS

For many years it was popularly believed that gas turbine engines could burn any type of fuel, from crude oil to aviation grade gasoline. Complex chemical compositions of aviation fuels are classified by their characteristics and specifications. In the selection of gas turbine engine fuels, several factors must be considered, such as volatility, flashpoint, heat energy content viscosity, handling characteristics, combustion products, effects of additives and impurities, and freeze point. In this text we limit our discussion primarily with two characteristics of fuel: volatility and flashpoint.

VOLATILITY

Volatility is the measurement of a liquid’s ability to convert to a vaporous state. Fuel must vaporize and be mixed with a given percentage of air for it to burn or explode. The volatility of a fuel effects engine starting, range, and safety. Increasing the temperature of the fuel increases the amount of vapors being released and therefore, increases the fuel’s volatility.

Volatility should not be confused with a fuel’s volatility rating. A fuel’s volatility rating is fixed. This rating or scale is similar to other types of rating such as “octane,” atmospheric pressure, or even academic grades. A fuel with a high volatility rating will vaporize and then ignite more rapidly than a less volatile fuel.

FLASH POINT

The lowest temperature of a combustible substance (fuel) that would ignite with a momentarily application of a flame is its **flash point**. A fuel's flash point and volatility rating are inversely related. As the fuel's volatility rating increases, the flash point of the fuel decreases. Flash point of a fuel is an index of its potential safety for handling and storage.

The relationships between volatility, temperature, and flash point are very important. They are critical factors in determining how a fuel will be ignited in an engine and how it must be stored prior to use.

MILITARY FUELS

The fuels (Figure 3.8-1) used in gas turbine engines by the military services have been given the prefix "JP" for jet propellant. These jet fuels are manufactured from crude oil petroleum and include a variety of chemical additives. The basic formula for JP fuel is a mixture of kerosene, gasoline and some naphtha derivatives. A brief review of the most common military fuels follows.

Figure 3.8-1 Military Fuels

JP-4 - **(NATO Code F-40)** is a wide-cut blend of kerosene with some naphtha fractions and gasoline. At one time, it was the most commonly used military fuel. It is a highly volatile fuel with a correspondingly low flash point (-35 °F). Compared to JP-5, JP-4's operating characteristics include easier starting, slower acceleration, lower operating temperatures, higher tendency to vapor lock, and shorter range.

JP-5 - **(NATO Code F-44)** is the Navy, Marine Corps, and Coast Guard's primary jet fuel. It was developed as a heavy kerosene to be blended with gasoline to produce a fuel similar to JP-4 for use on aircraft carriers. JP-5 is thermally stable, with a high heat content per gallon. Because of its low volatility and high flash point of 140 °F, it meets Naval safety requrirements for storage aboard ships.

JP-8 - **(NATO Code F-34)** is similar to JP-5 in most characteristics, except flashpoint. Significant advantages over JP-4 include fuel handling and operational safety. However, like JP-4, its flash point (100 °F) is lower than shipboard safety standards. The Air Force is currently using this type of fuel.

BASIC FUEL SYSTEM

The aircraft fuel system must supply clean fuel, free from vapor, at the proper pressures and flow rates to the engine under all operating conditions. With modern aircraft mission requirements, the following must be considered by the designer: High rates of fuel flow, low atmospheric pressure, piping system complexity, weight and size constraints, vapor loss with consequent reductions in range and cold weather starting.

Foldout 3.8-1 illustrates a typical fuel and control system for an engine that also contains an afterburner. The system described is typical for an axial compressor turbojet engine with afterburner. Although other fuel systems may differ somewhat, the same basic components will be present and their functions will be similar. The operations of each of these components will follow. Foldout 3.8-1 illustrating the fuel and control system is located at the end of this lesson and should be open during the presentation of this lesson.

FUEL TANK

The fuel tank (see Foldout 3.8-1) is the starting point for fuel. The tank is a reservoir, or holding cell, for the jet propellant. The material selected for the construction of particular fuel tanks depends upon the type of aircraft and its mission. Fuel tanks, as well as any fuel system, are normally made of materials that will not react chemically with any fuel. Most fuel tanks are made of synthetic rubber with self-sealing cells called bladders that fit into cavities in the wing or fuselage of the aircraft.

There are several ways the fuel tank can be fueled: **gravity**, **pressure**, and/or **inflight fueling**. The most common way will be pressure fueling, at which an aircraft can taking on fuel at the rate of 200 gallons per minute, gravity fueling is a back up system in a case of pressure fueling malfunction. The gravity fueling method is similar to the way we fuel our cars.

Low point drain valve is also found in the fuel tank. This is the lowest point of the tank where the daily fuel sample is taken. Most contaminants, especially water, settle in this area of the tank. Therefore, when the fuel sample is taken, these contaminants are collected to prevent any future fuel system failure.

BOOST PUMP

The boost pump (see Foldout 3.8-1) is an integral unit composed of a centrifugal pump and electric motor. Submerged and installed in the fuel tanks, they ensure an adequate supply of fuel to the engine-driven fuel pump. It may also be used to transfer fuel from one tank to another tank for proper weight and balance. Boost pumps are needed to supply fuel pressure for starting engines and to supply fuel to the primer system. Some aircraft have the boost pumps in an inverted flight reservoir. Inverted flight reservoirs are designed to supply boost pumps with fuel for short periods of time when you perform negative or zero-G maneuvers.

A critical function of the boost pump is to prevent aeration of the fuel supply which may result from a rapid pressure change incurred during a climb. As the atmospheric pressure decreases, bubbles of air may form (much like the nitrogen bubbles in a scuba diver's cardio-vascular system when ascending from a dive). In extreme cases these bubbles may induce vapor lock or cavitation of the engine-driven pump. The boost pump supplies the fuel under pressure to the main fuel pump, reducing or eliminating the effects of aeration.

EMERGENCY SHUTOFF VALVE

Should an emergency occur (i.e., an engine fire), an emergency handle (see Foldout 3.8-1) located in the cockpit allows the aviator to shutoff fuel to the engine. By pulling this handle (sometimes known as "E" or "T" handle), fuel to the engine will shutoff electrically and mechanically. Once pulled in flight, the engine cannot or will not be authorized to be put back in service during that flight.

FUEL PRESSURE GAUGE

Located in the cockpit, the fuel pressure gauge (see Foldout 3.8-1) receives signals from a pressure sensor at the boost pump outlet. A drop in fuel pressure may indicate a failed boost pump or absence of fuel. This could lead to cavitation of the main fuel pump.

LOW PRESSURE FUEL FILTER

The low pressure fuel filter (see Foldout 3.8-1) is usually a paper cartridge type filter, located downstream of the boost pump to strain impurities from the fuel. The

paper type filter also absorbs water which prevents it from passing through the pumps. Water in the system has led to malfunctioning fuel controls, ice plugging of fuel filters, and freezing boost and transfer pumps.

The minute openings make this type of filter susceptible to clogging; therefore, a bypass valve is a necessary safety factor to ensure a positive supply of fuel to the engine. During normal operations, the bypass valve is held closed by a spring. Should the filter become clogged, fuel pressure will increase causing the bypass valve to open enabling the engine to receive fuel even with a clogged filter.

ENGINE-DRIVEN PUMP

The engine-driven pump is a high pressure pump. It is generally a positive displacement gear, piston, or rotary type fuel pump designed to deliver fuel to the fuel control unit. This pump provides fuel in excess of engine requirements. The excess fuel ensures that a sufficient supply of high pressure fuel is available to meet engine requirements and if available, afterburner requirements.

FUEL CONTROL UNIT

The fuel control unit (FCU) (Figure 3.8-2) is the “brain” of the engine fuel system. It is incorporated in most military aircraft. The FCU is a hydromechanical or electrical device that consists of fuel computing and fuel metering systems. It is designed to send ‘metered fuel’ (measured fuel) to satisfy fuel-flow requirements for starting, acceleration, deceleration, and stabilized (steady state) operation. To ensure proper fuel flow, the computing system senses and combines various operational parameters or inputs under all engine operating conditions. These inputs include:

1. PCL position - inputs from the aviator
2. Compressor Inlet Temperature (CIT) - measures ambient air density
3. RPMs - compressor speed
4. Turbine temperature - prevent turbine damage

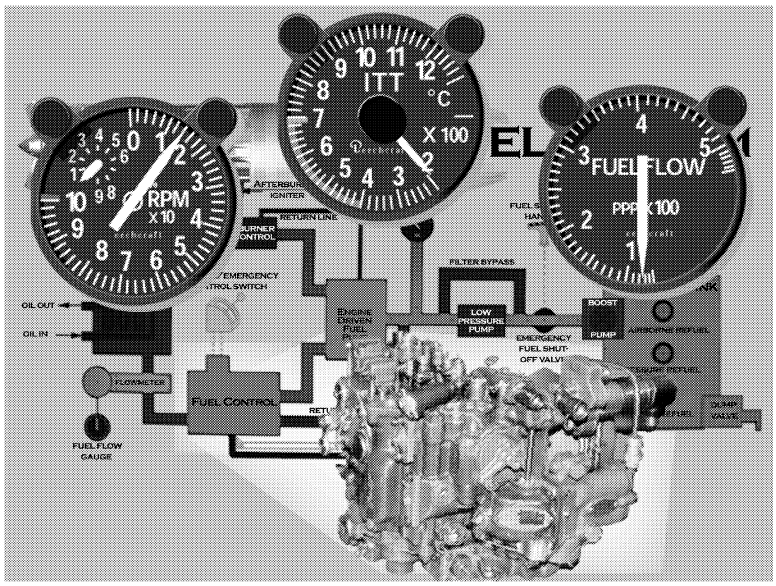

Figure 3.8-2 Fuel Control Unit

FUEL CONTROL UNIT MODES OF OPERATIONS

Normal (Automatic) Operation)

The FCU is normally operated under the Normal/Automatic Mode of operation. By analyzing the previously mentioned input variables, the FCU accurately governs the engine steady state, and it is able to accurately control fuel flow for acceleration and deceleration. While in this mode, the FCU provides the proper fuel flow for any operating conditions or any PCL inputs. Monitoring of engine gauges should still be performed by the aviator; however, as long as the FCU is functioning, the engine should remain stable and within normal operating ranges.

Manual / Emergency Operation

Should the FCU fail, manual/emergency fuel control can be selected. When manual is selected, the FCU is basically bypassed. For our discussion, the terms manual and emergency are interchangeable. A switch in the cockpit enables the pilot to select either the normal or the manual/ emergency system.

The manual/emergency system is simpler than the normal system, but lacks the acceleration-limiting and rpm-governing capabilities of the normal system. During manual/emergency operation, the PCL functions as a throttle and fuel flow is now regulated exclusively by its movement. The manual/emergency system permits

sustained operation, and may be used for engine starting and afterburning, but requires close cockpit attention to ensure that critical limits are not exceeded.

FUEL-FLOW GAUGE

A fuel-flow transmitter (see Foldout 3.8-1) is located at the outlet of the FCU just before the fuel-oil heat exchanger. This transmitter measures the fuel flow rate coming out of the FCU and converts it to electrical signals. The electrical signal is sent to the fuel-flow gauge in the cockpit indicating fuel consumption/usage in pounds per hour (PPH).

FUEL-OIL COOLER/HEAT EXCHANGER

The fuel-oil cooler is a heat exchanger (see Foldout 3.8-1) designed to preheat metered fuel and cool the engine lubricant as it flows from the engine. Preheating fuel removes any ice crystals and increases its volatility, facilitating efficient fuel ignition. If the engine is designed with a fuel-oil cooler, fuel will always flow through it.

FUEL MANIFOLDS

The fuel manifold (see Foldout 3.8-1) delivers fuel to the engine burner section through a series of fuel nozzles. Normally, the manifold assembly consists of a primary and a secondary (main) tubes/lines. The primary manifold has smaller diameter tubes than the secondary manifold. This feature permits fuel within the primary manifold to reach a comparatively high degree of pressure and atomization during starting and altitude idling conditions. The secondary manifold starts supplying fuel when engine rpm raises fuel pressure to a predetermined level; usually after engine rpm is stabilized after start. At this point, the secondary tubes begin to pass most of the fuel and deliver it to fuel nozzles.

PRESSURIZING AND DUMP (P&D) VALVE

The basic purpose of the P&D valve (Figure 3.8-3) is to drain the combustion manifold upon engine shutdown and to adjust fuel flow during engine starts.

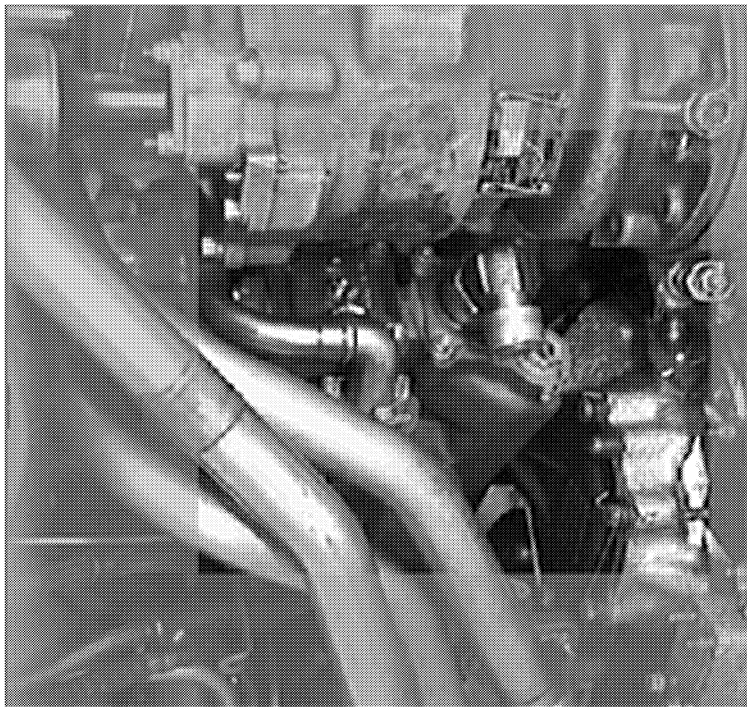

Figure 3.8-3 Pressurizing and Dump Valve

The P&D valve actually consist of two valves within one housing. During engine starts, the dump valve is closed by an electrical (pressure) signal from the FCU. The valve is kept closed by fuel flow pressure until engine shutdown. At engine shutdown, when the fuel flow pressure drops, the spring-loaded dump valve opens to drain the manifolds.

Also at engine start, the pressurizing valve, which is spring-loaded closed, limits the starting fuel-flow to the primary manifold. This ensures proper atomized fuel flow spray patterns in the combustion chamber. As the engine is accelerated to higher power settings, the pressurizing valve is forced open by steadily increasing fuel pressure. When the valve opens, fuel is allowed to flow into the secondary manifold.

It is imperative that the P&D valve be in good working condition to drain residual fuel from the manifolds after each shutdown. Residual fuel, if not drained, can lead to an engine fire upon shutdown, or a ‘hot start’ during the next starting attempt. It can also form carbon and gum deposits that could lead to operating problems, such as clogged manifolds and/or fuel nozzles.

AFTERBURNER FUEL SYSTEM

During afterburner operations (see Foldout 3.8-1), the **fuel transfer valve**, which is mounted on the body of the engine driven fuel pump, supplies fuel to the afterburner fuel control unit. The **afterburner fuel control unit** then meters fuel to the afterburner spray bars. Excess fuel is returned to the fuel pump inlet.

RATED THRUST

Monitoring engine performance instruments should be incorporated into an aviators 'cross check'. Turbine temperature is especially important since the limiting factor of a gas turbine engine is the turbine blades. Heat damage to turbine blades can occur through excessively high temperatures or prolonged exposure to relatively high temperatures. Thus, the maximum thrust rating of an gas turbine engine is based on the allowable ITT or TIT (turbine inlet temperature), for continuous or time-limited operations.

Normal Rated Thrust (NRT) - thrust produced at the maximum continuous turbine temperature with no time limitation. This rating serves for cruising speed.

Military Rated Thrust (MRT) - thrust produced at the maximum turbine temperature for a limited time; normally 30 minutes. The maximum temperature for MRT is higher than NRT; however, the time constraint ensures that the turbine blades aren't damaged. This rating can serve for take off or when additional thrust is desired.

Combat Rated Thrust (CRT) - thrust produced with the afterburner in operation, and is not based on turbine temperature limitations.

STUDY QUESTIONS

Fuel Systems

1. The tendency of a fuel to vaporize refers to its _____.

2. Define flashpoint.

3. What type of fuel is used during shipboard operations? Why?

4. An increase in temperature will cause what change, if any, in volatility? In flashpoint?

5. What are the major considerations in designing a fuel system?

6. What controls the amount of fuel delivered to the combustion chamber?

7. How does the pilot communicate with the Fuel Control Unit (FCU)?

8. List the various operational parameters the FCU must process to deliver the proper fuel flow to the engine.

9. Describe the emergency/manual fuel system.

10. Why is a boost pump included in the aircraft fuel system?

11. What part does the FCU play during engine starts?

12. What is the position of the pressurizing and dump valve during an engine start? During normal engine operation? During engine shutdown?

13. What cuts off fuel flow during engine shutdown?

14. Where does metered fuel begin in the aircraft fuel system?

15. What is military rated thrust?

16. What component measures the proper amount of fuel flow to the afterburner?

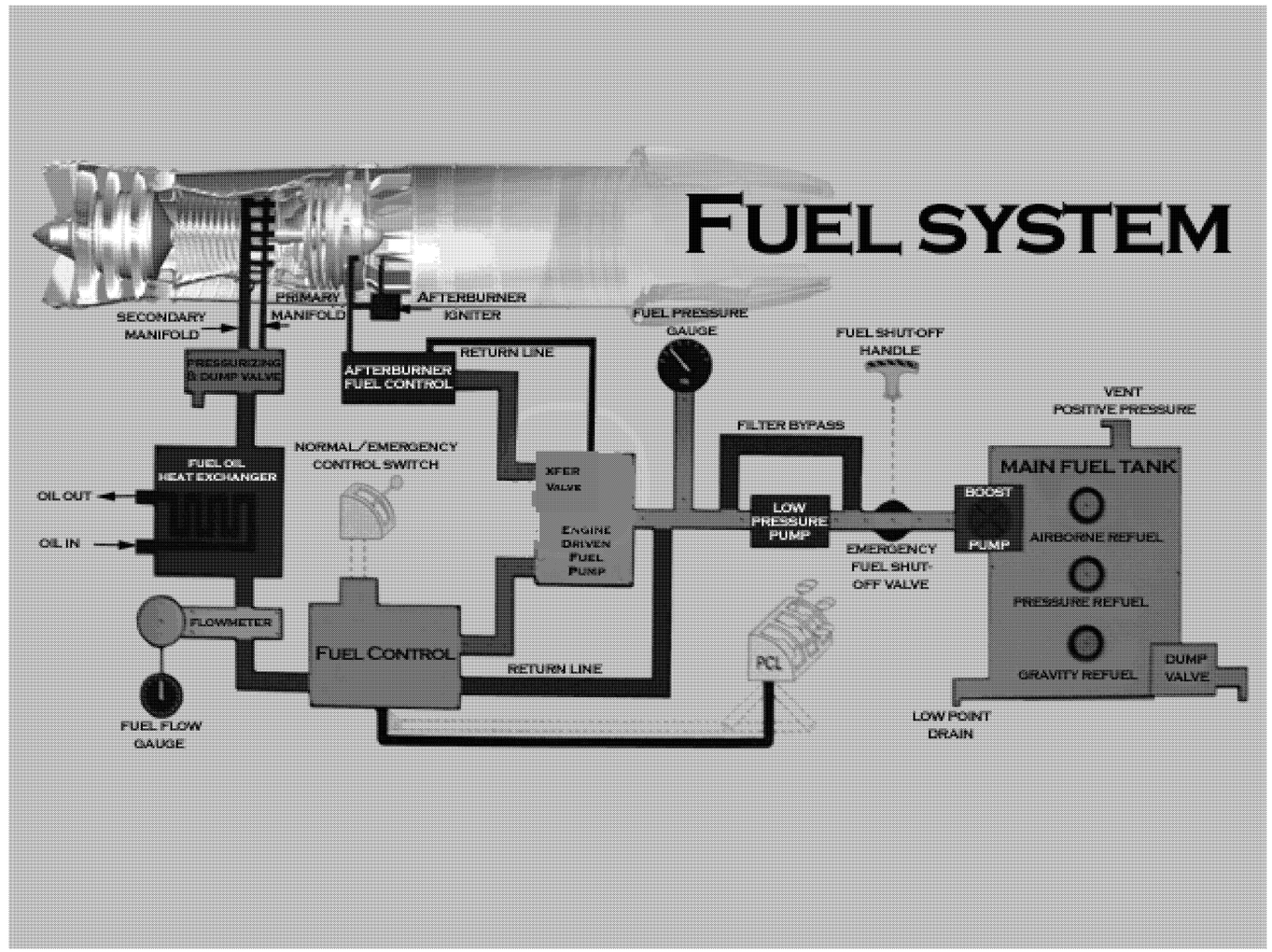

Foldout 3.8-1 Typical Aircraft Fuel System

ASSIGNMENT SHEET

Lubricants and Lubrication Systems
Assignment Sheet No. 3.9.1A

INTRODUCTION

The purpose of this assignment sheet is to aid the student in understanding lubricants and lubrication systems of gas turbine engines.

LESSON TOPIC LEARNING OBJECTIVES

Terminal Objective:
Partially supported by this lesson topic:

3.0 Upon completion of this unit of instruction, the student will demonstrate knowledge of the fundamentals of power plants and associated accessory systems.

Enabling Objectives:
Completely supported by this lesson topic:

3.85 Describe the characteristics of synthetic lubricants.

3.86 Define viscosity.

3.87 Describe the functions of lubricants.

3.88 Describe the operation of a basic aircraft lubrication system.

3.99 Describe the functions of the three subsystems of the aircraft lubrication system.

3.90 Describe the function of basic lubrication system components used on aircraft.

STUDY ASSIGNMENT

Review the Information Sheet 3.9.1I and complete the Study Questions.

INFORMATION SHEET

Lubricants and Lubrication Systems
Information Sheet 3.9.1I

INTRODUCTION

The increased complexity of aircraft engines has added to the requirements for proper lubrication. Oil is the lifeblood of the aircraft engine. If the oil supply to the bearings stops, the lubricating films break down and cause scoring, seizing, and burning between moving parts. Fortunately, the components of the aircraft oil system are dependable. Like the heart and circulatory system of the human body, the lubrication system quietly performs its function so well we forget its importance.

REFERENCES

1. NAVEDTRA 12000; Airman TRAMAN, 1990
2. NAVEDTRA 12300; Aviation Machinist Mate 3 & 2, 1991
3. NAVEDTRA 10324-A; Aviation Machinist Mate 1 & C, 1984
4. CNAT P-301 "T-34C Aircraft Familiarization Workbook”

INFORMATION

LUBRICANTS

The primary function of any lubricant is to reduce friction caused by metal-to-metal contact. Lubricating oils provide a film that permits surfaces to glide over one another with less friction. Therefore, lubrication is essential to prevent wear in mechanical devices where surfaces rub together.

MINERAL LUBRICANTS

Mineral Base - Mineral base lubricants are admirably suited to mechanical applications. This lubricant may be divided into three groups: Solids, semisolids and liquids.

Solids - Solids include mica, soapstone and graphite. When in powdered form, they fill the low spots in bearing surfaces to form a smooth surface with a very low coefficient of friction. Solid lubricants do not dissipate heat rapidly, so their use is limited to low temperature operations.

Semisolids - Semisolids, or greases, are frequently used for steel bearings, and give excellent service when changed periodically. Like solid lubricants, semisolids do not efficiently dissipate heat and have limited applications.

Liquids - Liquids are used as lubricants for all internal combustion engines. Liquid lubricants are pumped or sprayed on bearing surfaces to provide cushioning and to dissipate heat. An essential requirement of the liquid lubricant is that it must remain chemically stable over long periods of time, under normal operating conditions.

SYNTHETIC OIL

Acids and other chemicals are the base of synthetic oils. Some of these materials are incompatible and synthetic oils of different manufacturers are not necessarily derived from the same base. Therefore, it is important to ensure that synthetic oils produced by different manufacturers are not mixed or indiscriminately used together in the same engine. Additionally, synthetic oils are not compatible with mineral or petroleum base oils and must never be mixed (the result of mixing is a thick sticky mass with poor lubricating qualities).

Although synthetics have some disadvantages, we use it because of its fine lubrication qualities over that of petroleum based oils. These qualities include a lower tendency to leave coking deposits, and it has a stronger chemical stability at high temperatures.

Synthetic oil is very corrosive. It can damage paint as well as any rubber material such as O-ring seals and gaskets that are not part of the lubrication system. Besides being corrosive, It also has a limited shelf life of approximately six months.

DESIGNATIONS OF LUBRICATING OILS

All lubricating oils used by the military are given a classification number indicating the grade and intended use for the various oils. The synthetic oils used in gas turbine engines are referred to by their military specification number. MIL-L-7808 was the first synthetic oil developed and it is still in use. However, most jet engines currently use MIL-L-23699 (NATO Number 0-156).

These two synthetic based oils can be safely mixed when necessary. Although they may be mixed, the characteristics of 23699 would be downgraded to the qualities of 7808.

OIL GRADE UTILIZATION

Several factors must be considered when determining the proper grade of oil for a particular engine. The operating load, rotational speeds and operating temperatures of the engine are the most important factors. Once the operational parameters of the engine is defined, then the proper grade of oil with its matching physical properties can be selected.

One of the properties of an oil that is important is its viscosity. **Viscosity** is defined as the property of a fluid that resists the force tending to cause the fluid to flow. The viscosity of a fluid is inversely related to temperature; as temperature increases the viscosity decreases and vice versa. Therefore, oil viscosity is the measure of its ability to flow at a specific temperature.

Proper oil viscosity in the engine ensures a **squeeze film** or very thin film of lubricant preventing metal to metal contact. Engines parts are designed to be close fitting and not "swimming" in oil. This thin layer of oil also allows the rapid absorption and dissipation of heat; provided that the oil is able to be drawn away from the engine parts quickly.

CONTAMINATION

The presence of contamination in the lubrication system of a gas turbine engine can be just as disastrous to engine operation as contamination of the fuel system. The most prevalent form of contamination in all engines is the generation of small metal particles due to metal to metal contact. This is unavoidable, but it can be minimized by using a lubricant of the proper viscosity and using filters to strain out the contamination.

Contamination such as carbon deposits (coking) are formed by oil evaporation, especially in the bearing compartments where heat is concentrated. The carbon builds up on surfaces until, eventually, pieces break off and are circulated through the engine lubricating system. Pieces of carbon are usually not hard or large enough to cause failure of the pumps, but they may be large or numerous enough to clog the filter or restrict passages in the system.

The presence of sand, dirt and metallic particles in the lubrication system is another source of contamination. Most contamination of this type can be traced to improper servicing procedures, such as the use of dirty oil containers and funnels.

To help prevent oil contamination, a **PON-6** or **bowser** (Figure 3.9-1) should be used to service all aircraft engines. A PON-6 or bowser is an engine oil servicing unit, with an in-line filter and gauge indicating the amount of quarts of oil pumped into the oil tank. Oil should not be poured directly from the can to the engine oil tank. To use the

oil servicing unit, oil from the can is poured into the PON-6 or bowser and then hand pumped into the oil tank. The in-line filter prevents any contamination present in the atmosphere such as dust, sand, and/or any metal particle that could have come from the opening of the oil cans.

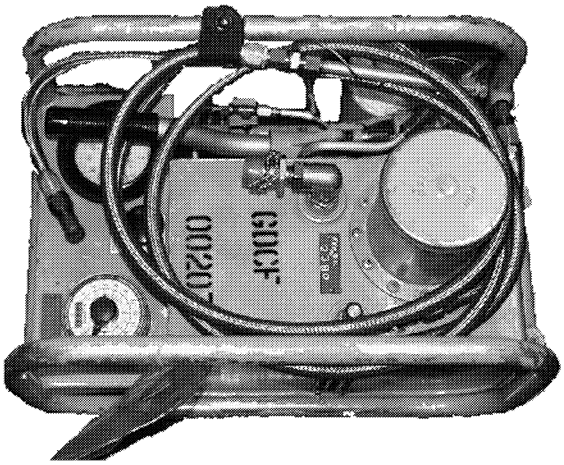

Figure 3.9-1 PON-6

LUBRICATION SYSTEMS

Lubrication systems (Foldout 3.9-1) used in jet engines are relatively simple in design and operation, but their function is important. The primary function of the lubrication system is basically the same as the function of the oil: provide an adequate supply of clean oil to the bearings and gears at the proper pressure and temperature, remove heat from the engine, and remove contaminants from the system. Foldout 3.9-1 illustrating the lubrication system is located at the end of this lesson and should be open during the presentation of this lesson.

The ability of the oil to lubricate effectively depends on its temperature and pressure. If the oil is too hot, it will have insufficient viscosity. If it is too cold, it will offer too much resistance to movement between parts and will flow too slowly for proper lubrication. If the oil pressure is low, it will not supply a sufficient quantity of oil to the bearing for proper cooling. If the pressure is high, it may cause the ball or roller in the high speed bearings to skid and not roll properly.

WET SUMP SYSTEM

Lubrication systems of modern jet engines are quite varied in design. However, they normally fall into two common categories: the wet and dry sump system.

The wet sump system is used on engines that only need a limited supply of oil and limited cooling. The reservoir for the wet-sump system is either the accessory gear

case or a sump mounted to the bottom of the accessory gear case (very similar to an automobile). The main disadvantages of this system: The oil supply is limited by the sump capacity; it is hard to cool the oil (oil temperatures are higher because the oil is continuously subjected to engine temperature), and the system is not adaptable to unusual flight attitudes for extended periods of time since the oil would flood the engine.

DRY SUMP SYSTEM

Most aircraft employ a dry sump configuration for oil storage. In a dry sump system (Figure 3.9-2), the oil supply is carried in a tank located in the airframe or mounted on (but not an integral part of) the engine. With this type of system a larger oil supply can be carried and the temperature of the oil can be readily controlled. The dry sump system allows axial flow engines to retain their comparatively small diameter by arranging the oil tank and oil cooler in a manner consistent with the streamlined design of the engine. A dry sump oil system is shown in Figure 3.9-2.

A dry sump gas turbine lubrication system is self-contained and will always have a pressure and scavenge subsystem. Normally a third subsystem called the breather pressurizing subsystem is also used.

Three Subsystems of the Dry Sump System:

Pressure subsystem - supplies lubricating oil from the tank to the main engine bearings and the accessory drives.

Scavenge subsystem - removes the oil from the main bearings and accessory drives through the oil coolers and returns it to the tank, completing the oil flow cycle.

Breather pressurizing subsystem - connects the individual bearing compartments and the oil tank with the breather pressurizing valve to help minimize oil leakage.

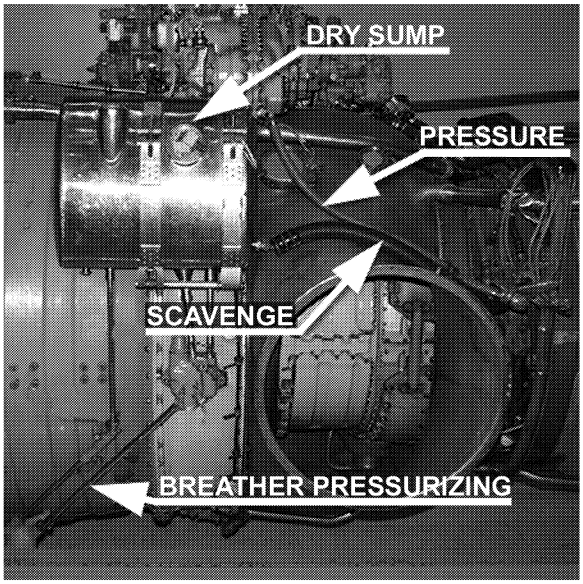

Figure 3.9-2 Dry Sump System

PRESSURE SUBSYSTEM

OPERATION

Pressure subsystems normally employ an engine driven, gear type, pressure pump. The pump receives oil at its inlet side through gravity flow from the oil tank and discharges oil to a spacers-and-screens type oil filter. From the oil filter, oil is transmitted downstream to the pressure relief valve. The pressure relief valve regulates system pressure and returns unwanted oil to the pump inlet. From the pressure relief valve, the oil is sent via tubing to lubricate the main engine bearings and accessory drive housing. The pressurized oil is sprayed through fixed orifice nozzles, providing a relatively constant oil flow at all engine speeds.

COMPONENTS

The components described below include most of the items generally found in gas turbine engine lubrication systems. However, since each oil system varies according to engine model and/or manufacturer, not all of these components will necessarily be found in any one system.

The **oil tank** (reservoir) stores the system oil supply and is normally located within or near the aircraft engine compartment. It is often placed high over the engine to gain the advantage of gravity flow to the oil pump inlet. Although dry sump systems use an oil tank which contains the vast majority of the oil supply, a small sump may be included on the engine.

A view of a typical oil tank is shown in Figure 3.9-3. It is designed to furnish a constant supply of oil to the engine in any aircraft attitude to include inverted flight or during negative "G" maneuvers. This figure depicts a weighted swivel outlet assembly which is mounted inside the tank.

<u>Gravity, acting on the weighted end, ensures the pickup end is constantly immersed in the oil supply</u>. The flapper valves in the baffle are normally open. They close during deceleration and inverted flight when the oil in the bottom of the tank tends to rush to the top of the tank. Operation of the flapper valves traps the oil in the lower portion of the tank ensuring the swivel outlet fitting remains immersed. This figure can supply oil to the engine for a limited period of inverted flight.

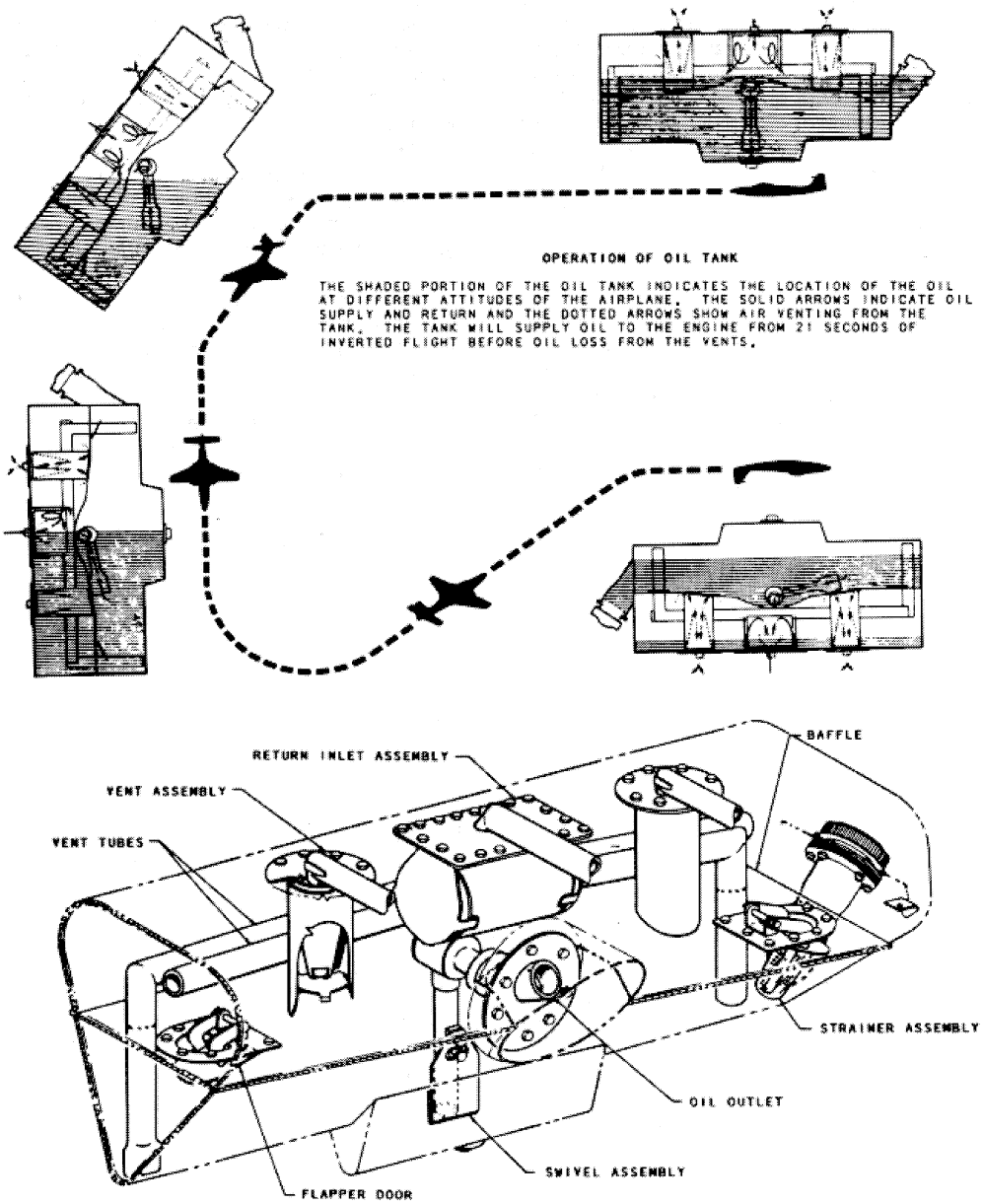

Figure 3.9-3 Swivel Assembly

All oil tanks provide an expansion space and venting to ensure proper operation. This space is required to allow for both expansion of the oil due to heat absorption, and foaming due to circulation through the system. The vent system is arranged so the airspace is vented at all times, even though oil may be forced to the top of the tank by deceleration or inverted flight.

Oil Pump - The oil pump supplies oil under pressure to the parts of the engine that must have lubrication. Most oil pumps consist of a pressure supply element to supply oil and scavenge element to remove oil from an area. Some oil pumps, however, serve only a single function; they either supply or scavenge the oil. The number of pumping elements, both pressure and scavenge, will depend largely on the type and model of the engine. For instance, axial flow engines that have a longer rotor shaft, require more bearings for support than on a centrifugal flow engine.

Sometimes small individual scavenge pumps are used in the more remote sections of an engine. In all types of pumps, the scavenge elements have a greater pumping capacity than the pressure element to prevent back pressure in the system and/or the accumulation of oil in the bearing sumps.

The gear type oil pump is illustrated in Figure 3.9-4. This particular model has two elements, one for pressure and one for scavenge. Remember, these pumps may have one, or several elements. Dual function pumps like the one illustrated may have one or more elements for pressure as well as one or more elements for scavenging.

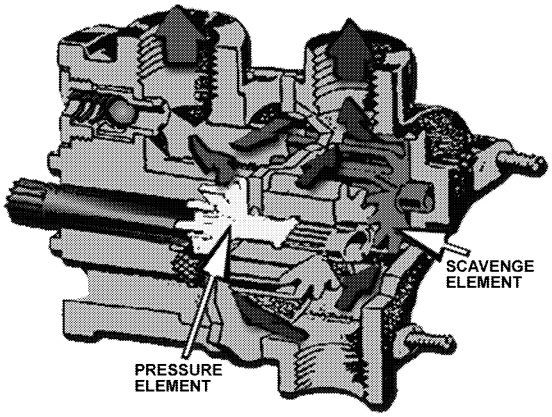

Figure 3.9-4 Gear Type Pump

Instrumentation - Gauges in the cockpit display the oil temperature and oil supply which is necessary for monitoring the performance of the lubrication system. These instruments indicate current operations and possible future failures of the lubrication components.

The **oil pressure gauge** (Figure 3.9-5) displays oil pump discharge pressure. It is used to indicate a normal or a failing pump. In most systems, breather pressure is taken into consideration, relaying the true system pressure.

The **oil temperature gauge** (Figure 3.9-5) displays the temperature of the oil prior to entering the engine bearing compartments. It is used to indicate the performance of the scavenge subsystem which contains the engine oil cooler(s).

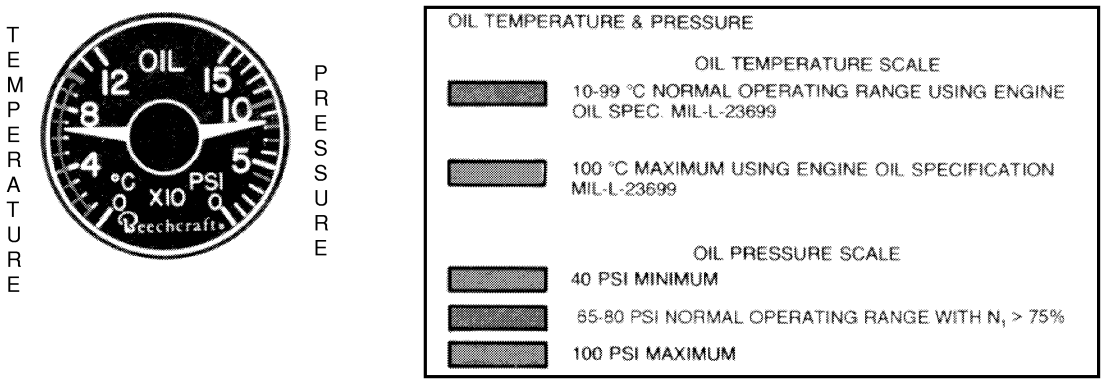

Figure 3.9-5 T-34C Oil Temperature / Pressure Gauge

Filters remove any foreign particles that may be present in the oil. This is particularly important in gas turbine engines because of the high engine speeds. In addition, the contaminates could easily clog the series of small drilled or cored passages leading to various lubrication points.

Several types of filters are used to filter the oil and they come in a variety of configurations. One type of filter uses a replaceable laminated paper element, such as those used in hydraulic systems. Another type of filter uses elements made up of a series of spacers and screens, as shown in Figure 3.9-6.

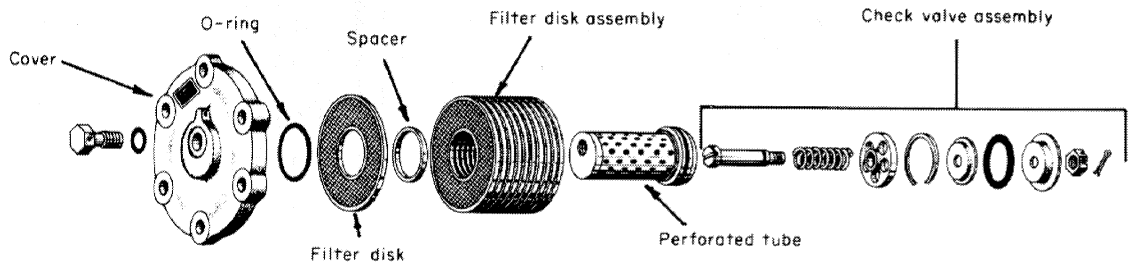

Figure 3.9-6 Oil Filter

The **filter bypass valve** (see Foldout 3.9-1) allows oil to flow around the filter element, should this filter become clogged. If this occurs, the filtering action is lost,

allowing unfiltered oil to be pumped to the bearings. Filter assemblies are easily accessible for removal and cleaning purposes.

An **oil pressure relief valve** (see Foldout 3.9-1) is in the pressure oil line to limit the maximum pressure within the system. The relief valve is preset to relieve pressure by bypassing oil back to the pump inlet whenever the pressure exceeds a safe limit. This valve is especially important if an oil cooler is incorporated in the system, because oil coolers are easily ruptured due to their thin wall construction.

SCAVENGE SUBSYSTEM

The scavenge subsystem removes oil from the main bearing compartments and accessory gear drives. Under certain temperature conditions, this subsystem circulates the oil through the oil cooler(s) and back to the tank. As mentioned earlier, to prevent hot oil accumulation in the bearing sumps, these scavenge pumps have a greater pumping capacity compared to pressure pumps.

The **magnetic-chip detector** is a metal plug with magnetized contacts, and is placed in the scavenged oil path. These detectors are normally located at the lower part of the accessory gearbox and/or reduction gearbox. When the magnetized contact points collect enough metal particles, a circuit is completed between the contacts which illuminates a warning light in the cockpit. The pilot is advised of metal contamination which is an indication of possible failure of one of the engine gears, bearings, or other metal parts.

Oil Coolers are often used in lubrication systems to reduce the temperature of the oil for re-circulation through the system. This cooler may be an air-oil type, a fuel-oil type or a combination of the two. Dry sump lubrication systems require coolers because air entering the axial-flow engine does not flow around the oil reservoir like it does on wet sump systems.

The two basic types of oil coolers: the air-oil cooler and the fuel-oil heat exchanger (oil is cooled and fuel is heated), which is the most common type.

The **air-oil cooler** is a radiator type device normally installed at the inlet end of the engine. As an integral part of the engine, this cooler uses ambient air that passes through its fins, to cool the oil. A controllable vent/duct door is used to regulate when the outside air is allowed to pass through the cooler.

The **fuel-oil cooler/heat exchanger** is designed to cool the hot oil taken from the bearings and to preheat the fuel for combustion. Fuel flow to the engine must pass through the fuel-oil cooler/heat exchanger; however, a thermostatic valve allows the oil to bypass the cooler if no cooling is needed. The fuel-oil cooler consists of a series of

adjoining aluminum fuel circulating lines in an aluminum outer shell. Oil enters an inlet port, flows around the fuel lines, and goes out the outlet port. Under some operating conditions, this cooler alone is sufficient to cool the oil.

Oil Temperature Regulating Valve - The oil temperature regulating valve is located at the oil entrance to the fuel-oil heat exchanger. It directs the flow of return oil into the fuel-oil heat exchanger to allow cooling to occur. If no oil cooling is needed, the valve remains closed, routing the oil directly to the oil tank, bypassing the heat exchanger.

Fuel Temperature Sensing Switch - The fuel temperature sensing switch, located in the fuel outlet line of the fuel-oil heat exchanger, senses the exiting fuel's temperature. When the fuel temperature is excessive, the fuel temperature sensing switch sends an electrical signal/circuit to actuate the air-oil cooler doors. These doors allow air to pass through the air oil cooler to cool the oil that is always passing through the cooler.

BREATHER PRESSURIZING SUBSYSTEM

The breather pressurizing subsystem provides the following functions: 1) minimizes internal oil leakage by encasing the oil sumps (located around the engine bearing) with pressurized air, 2) ensures proper spray patterns of oil across the bearing by mixing pressurized air with the oil to form a fine oil mist for the bearings.

The breather pressurizing subsystem pressurizes the scavenge subsystem along with the oil tank to sea level pressure. <u>It uses a breather pressurizing valve (Figure 3.9-7) which consists of an aneroid operated (spring and bellows) valve and a spring loaded blow off valve.</u> <u>Pressurization is provided by compressor bleed air.</u> At sea level pressure, the breather pressurizing valve is open to the atmosphere. It closes gradually with increasing altitude (decreasing atmospheric pressure) to maintain approximately 29.92 in hg of pressure. The spring loaded blow off valve acts as a pressure relief for the entire breather system, opening only if pressure above a predetermined limit builds up in the system.

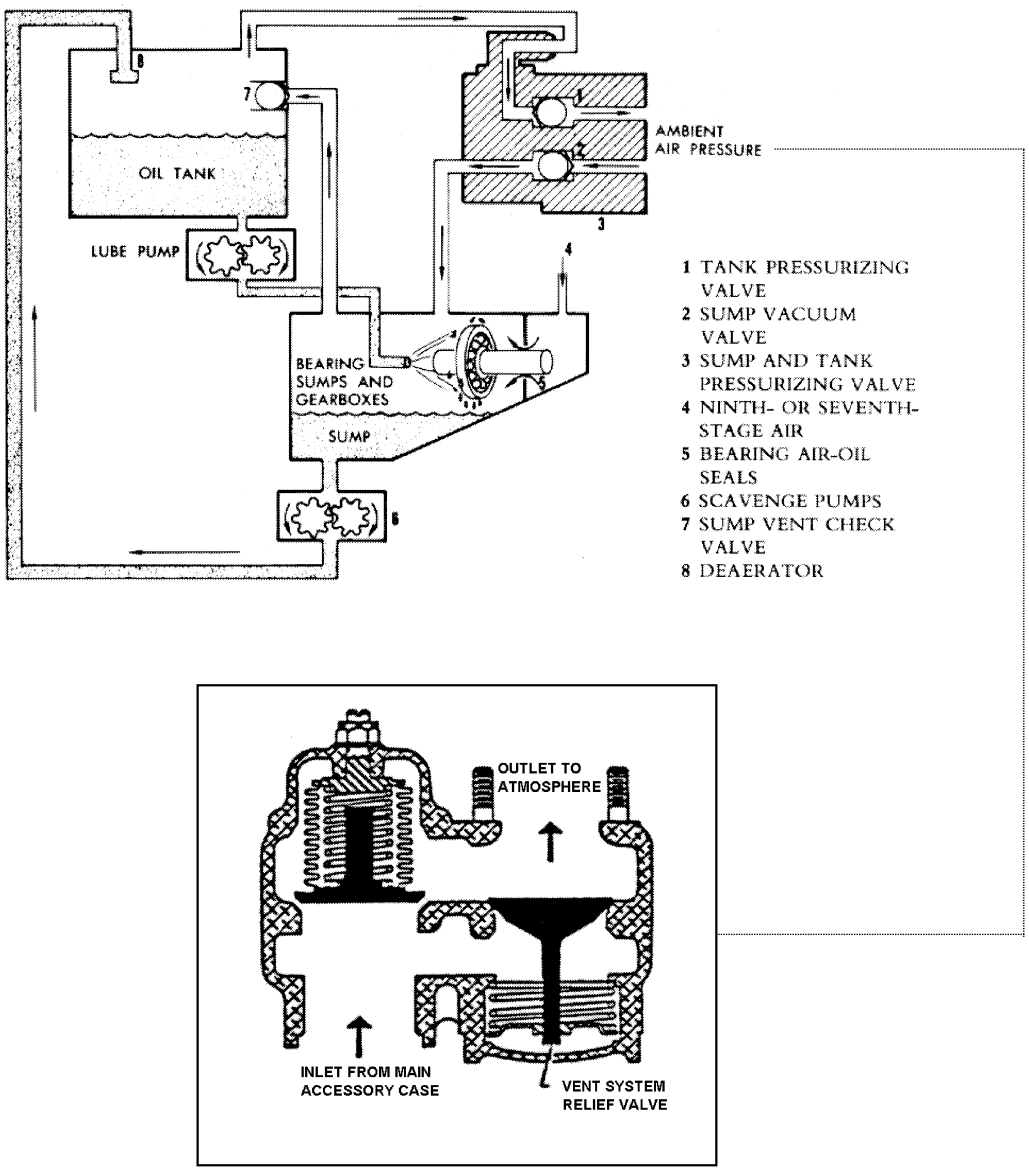

Figure 3.9-7 Breather Pressurizing Valve

STUDY QUESTIONS

Lubricants and Lubrication Systems

1. Why do gas turbine engines use a synthetic oil?

2. Why are liquid lubricants the best type for use in gas turbine engines?

3. What is the designation of the most common synthetic oil used by the military?

4. What are the advantages of a synthetic oil over a petroleum base oil?

5. Are synthetic base and petroleum base oils compatible with each other?

6. List the various types of oil contamination. What is the most common type of contamination?

7. How does the shelf life of synthetic oil compare to that of petroleum oil?

8. What is the purpose of a lubrication system?

9. Define viscosity.

10. What is the relationship between temperature and viscosity?

11. What is the difference between a wet and dry sump system?

12. What is the main advantage of a dry sump system?

13. What does an oil reservoir contain to ensure a constant oil supply during all flight attitudes and G loads?

14. What are the two functions of pumps used in the lubrication system?

15. What does the oil pressure system use a relief valve for?

16. Where is oil pressure monitored? Why?

17. What does the filter bypass valve do?

18. What are the two types of oil coolers?

19. What is the fuel-oil heat exchanger designed to do?

20. Does fuel always go through the fuel-oil heat exchanger?

21. Does oil always go through the fuel-oil heat exchanger?

22. Does airflow always go through the air-oil cooler?

23. What are the three subsystems of the engine lubrication system?

24. What does the pressure subsystem do?

25. What does the scavenge subsystem do?

26. Where is the oil temperature regulator valve located and what does it do?

27. Where is oil temperature monitored?

28. Where is the fuel temperature sensing switch located and what does it do?

29. What is the function of the breather pressurizing subsystem?

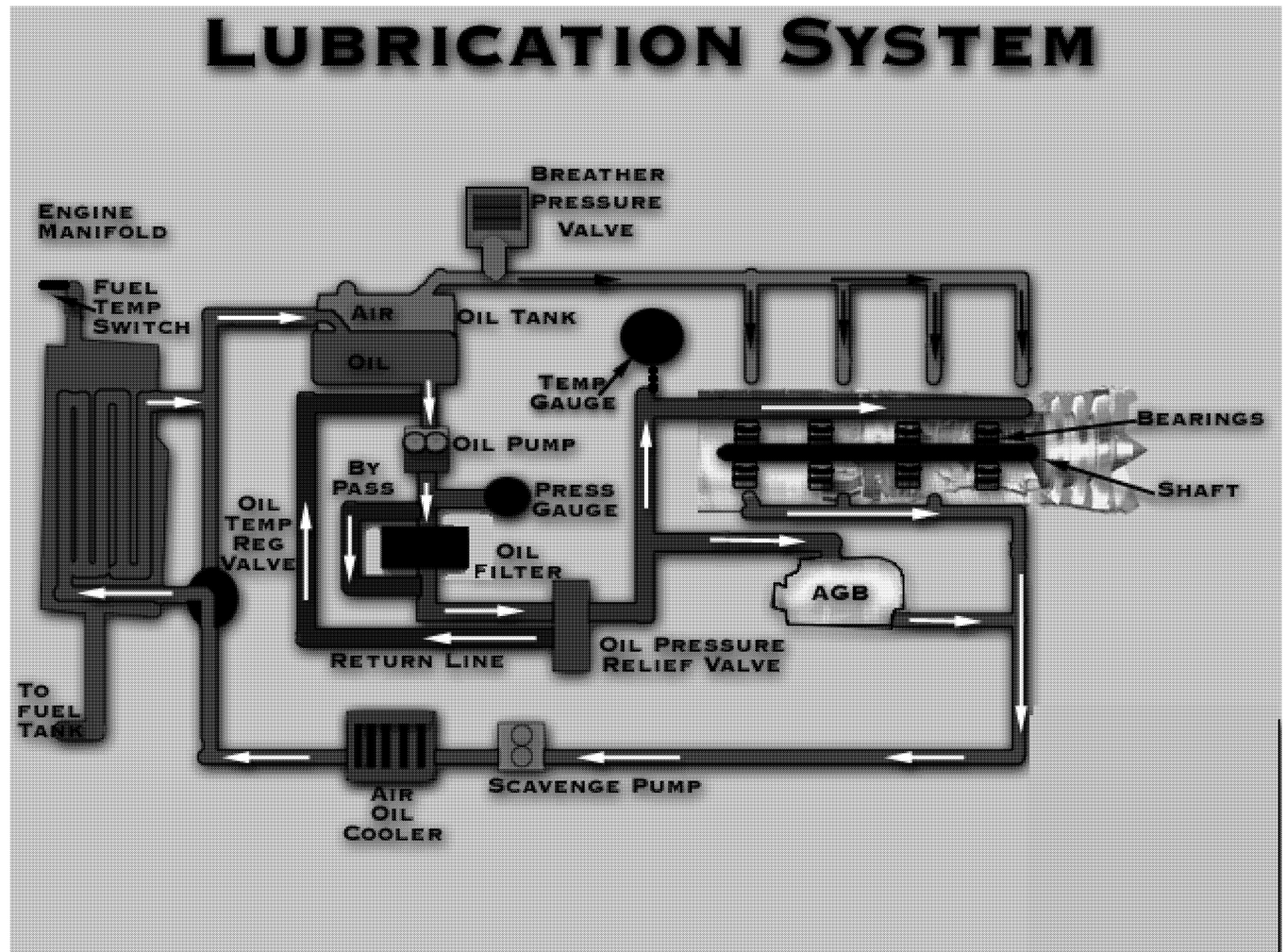

Foldout 3.9-1 Typical Lubrication System

ASSIGNMENT SHEET

Accessory, Starter and Ignition Systems
Assignment Sheet 3.10.1A

INTRODUCTION

The purpose of this assignment is to aid the student in understanding the accessory, starter and ignition systems of gas turbine engines.

LESSON TOPIC LEARNING OBJECTIVES

Terminal Objective:
Partially supported by this lesson topic:

3.0 Upon completion of this unit of instruction, the student will demonstrate knowledge of the fundamentals of power plants and associated accessory systems.

Enabling Objectives:
Completely supported by this lesson topic:

3.91 Describe the types of accessories used on aircraft.

3.92 Describe how the accessories are driven.

3.93 Define interstage bleed air.

3.94 Describe the starting sequence for a gas turbine.

3.95 Describe the four types of abnormal starts.

3.96 Describe a DC Electric starter.

3.97 Describe an Air Turbine Starter.

3.98 Describe a basic aircraft ignition system.

3.99 Describe the two types of ignitors.

STUDY ASSIGNMENT

Review the Information Sheet 3.10.1I and answer the Study Questions.

INFORMATION SHEET

Accessory, Ignition and Starter Systems
Information Sheet 3.10.1I

INTRODUCTION

Accessory, starter and ignition systems commonly used in gas turbine engines are discussed in this lesson topic.

REFERENCES

1. NAVEDTRA 12000; Airman TRAMAN, 1990
2. NAVEDTRA 12300; Aviation Machinist Mate 3 & 2, 1991
3. NAVEDTRA 10324-A; Aviation Machinist Mate 1 & C, 1984
4. CNAT P-301 “T-34C Aircraft Familiarization Workbook”

INFORMATION

ACCESSORIES

Accessories for gas turbine engines can be divided into two categories: those driven by bleed air and those driven mechanically.

AIR-DRIVEN ACCESSORIES

Gas turbines are unique because bleed air is readily available for driving aircraft accessories. Compressor discharge air at high pressure and temperature is bled from the engine through ports or valves at intervals along the compressor case and at the end of the diffuser (Figure 3.10-1). It is ducted as a source of power for operating air conditioning units, cockpit pressurization and engine anti-ice.

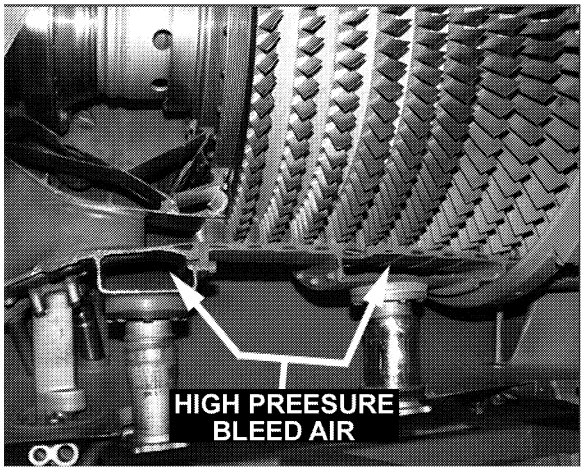

Figure 3.10-1 Bleed Air

Cockpit or cabin pressurizing and heating units sometimes are operated by a separate air compressor, while in other aircraft, engine compressor bleed air is piped directly to the cockpit for pressurization. The use of a separate compressor guarantees uncontaminated air for aircraft crew and passengers but adds weight and power requirements. Although more economical, cockpit or cabin pressurization by use of

engine compressor bleed-air is usually found only on military aircraft because the air may be contaminated by oil particles, smoke, or some other substance from the interior of the engine. In this case, oxygen masks are worn by the crew members.

Dual-axial compressor engines usually have three separate bleed air systems: High pressure, low pressure and interstage bleed-air (Figure 3.10-2). The high and low pressure systems are used to drive aircraft and engine components or accessories, while the interstage bleed valves are required to ensure compressor stability. High pressure air is also used to anti-ice the engine air inlet guide vanes and parts of the aircraft air inlet duct. The compressor interstage bleed air, which is ducted overboard to prevent compressor stall during certain periods of low thrust operation, is not used to drive accessories since it is not available at high thrust settings. Also, it lacks steady volume or pressure.

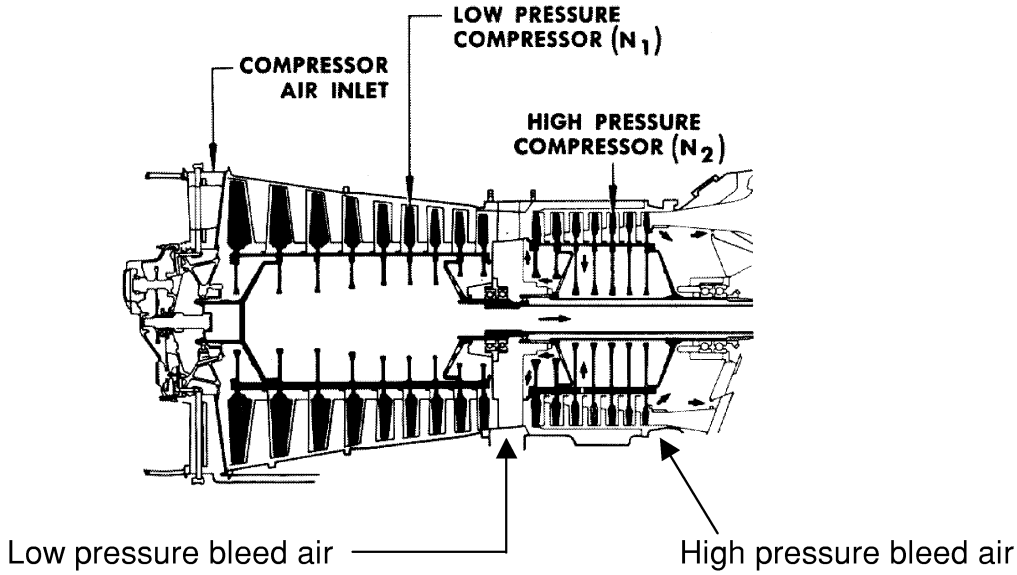

Figure 3.10-2 Low and High Pressure Bleed Air Locations

The amount of air available for driving accessories is usually from one to four percent of the total airflow through the engine. This bleed air is extracted from the engine with a sacrifice of engine output or fuel consumption.

MECHANICALLY-DRIVEN ACCESSORIES

The other method of driving accessories is by a mechanical, geared drive taken directly from the main shaft connecting the turbine to the compressor (Figure 3.10-3). These can be located in front of the compressor or in various locations around it. This method is used for tachometers, hydraulic pumps, generators, alternators and other accessories that must be mounted near or connected directly to the engine. Dual-axial compressor engines usually have two accessory drive gear boxes: one connected to the low pressure compressor and the other to the high pressure compressor.

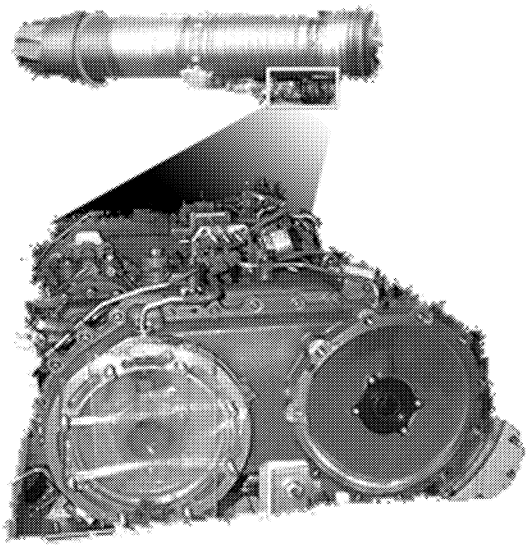

Figure 3.10-3 Mechanical Geared Drive

STARTING SYSTEMS

The purpose of any starter system is to accelerate the engine until the turbine is producing enough power to continue the engine acceleration itself. This is called the self-accelerating speed. The choice of a starting system depends upon various factors, and no one starter shows a definite superiority over other types.

Starting Cycle - Figure 3.10-4 graphically illustrates a typical starting sequence for a gas turbine engine. As soon as the starter has accelerated the compressor sufficiently to establish airflow through the engine, the ignition is activated and then the fuel is added. The exact sequence of the starting procedure is important because airflow must be sufficient enough through the engine to prevent the danger of an explosion when the fuel-air mixture is ignited. Unlike a reciprocating engine starter, the gas turbine starter must continue to accelerate the engine after light-off, and even after the engine reaches self-accelerating speed. This is to avoid a delay in the starting cycle, which could result in an abnormal start. The higher the compressor rpm before the starter is secured, the shorter will be the total time required for the engine to attain

idle rpm. This is because the engine and the starter are working together to furnish torque above the self-accelerating speed. Slower than normal accelerations, or starters that drop out too soon, may cause some type of abnormal start.

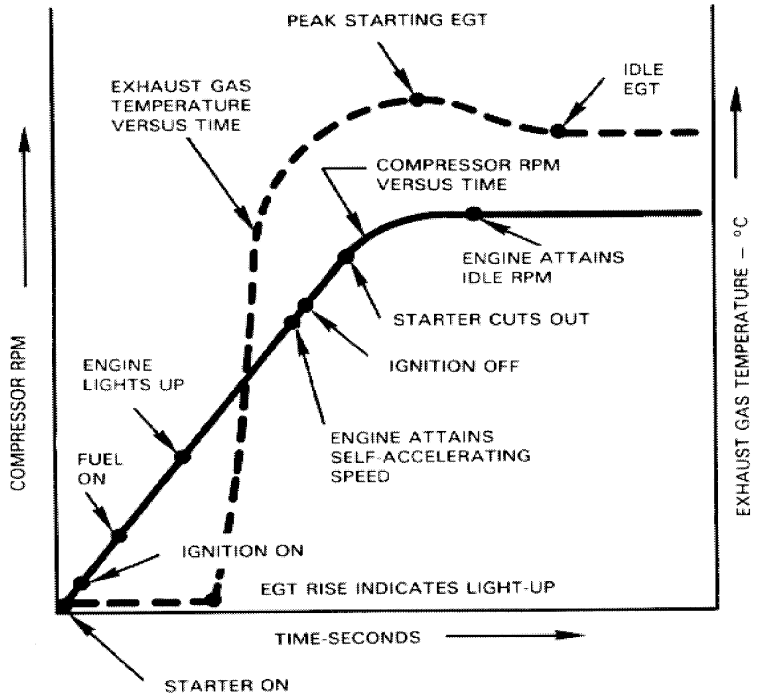

Figure 3.10-4 Starting Cycle

Abnormal Starts - Certain terms are used to describe abnormal starts. A "**hot start**" is defined as exceeding the maximum allowable temperature for the turbine section during start. A "**hung start**" describes a situation where the temperature within the turbine section continues to rise, and the compressor rpm stabilizes below normal. A "**false start**" occurs when compressor rpm stabilizes below normal, and the turbine temperature remains within limits. A "**wet start**" is a situation in which the fuel-air mixture does not light off initially, but has the capability to eventually ignite. The wet start is an ignition problem and is the most dangerous type of abnormal start. Any of these abnormal starts can be caused by conditions already described, or by faulty fuel controls, starters, ignitors, power supplies or human error.

Even small gas turbine engines require large amounts of either electric or pressure energy for starting the engine. Large engines require correspondingly more. Some starting systems are completely self-contained, while others require power from external sources. Many aircraft carry their own energy source in a self-contained small auxiliary gas turbine engine (APU), which produces electric and/or pressure energy. Power may also be taken from a running engine in a multi-engine aircraft. In such a situation, the first engine might be started using either an internal or external source of

power. The other engine(s) can then be started in turn with power taken from the running engine. On multi-engine aircraft equipped with pneumatic engine starters, one engine is usually started from a ground air source, then air from this operating engine is bled through a system of ducts in the aircraft to be used to turn the starters of the other engines.

STARTERS

Many different starters have been created for many various reasons, and although they each have advantages and disadvantages, we will primarily discuss two types: the DC Electric Motor, and the Air Turbine Starter.

DC ELECTRIC MOTOR

Electric starters are the most common type used on small gas turbine engines. The electric starter is mechanically connected to the compressor and is mounted on either the engine accessory gear box or the front frame of the engine. A battery, auxiliary power unit or external electrical source may be used to supply electric current to the starter motor.

"The T-34C and the T-37 has a starter-generator (Figure 3.10-5) mounted on the engine accessory drive section and is able to function either as a starter or a generator. In the starter function, battery or auxiliary DC power is required to power rotation."

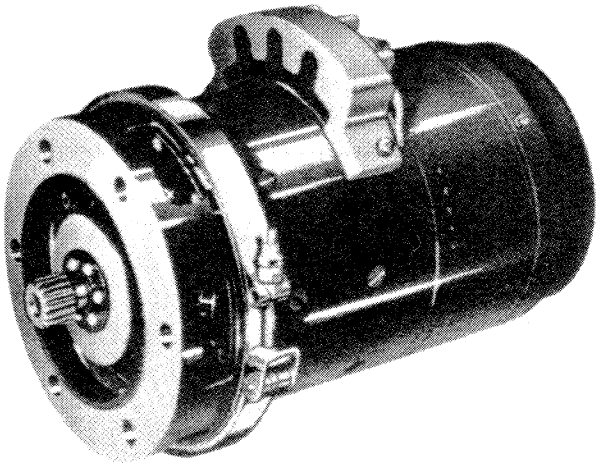

Figure 3.10-5 Starter Generator

AIR TURBINE STARTER (ATS)

Air turbine or pneumatic starters (Figure 3.10-6) are probably the most common type used on large gas turbine engines. A small, geared, air turbine motor is attached to the engine. Air is directed to the air turbine, which accelerates the compressor. This air is supplied by a ground cart or an internal power unit such as an APU. On multi-engine aircraft, after one engine is on-line, bleed air from that engine is used to start the remaining engines.

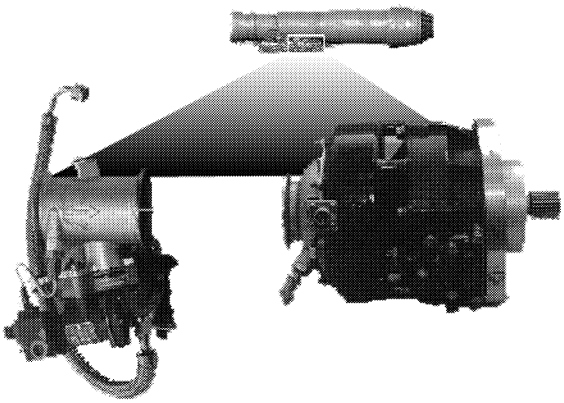

Figure 3.10-6 Air Turbine Starter

IGNITION SYSTEMS

Although combustion engines can be ignited (Figure 3.10-7) quite easily under ideal conditions, aircraft engines must be designed to ignite in nearly all situations. This includes high altitudes where the cold temperature decreases fuel volatility and makes it more difficult for relighting a flamed-out engine. Therefore, a high energy capacitor-type ignition system is normally used for gas turbine engines. This provides both high voltage and an exceptionally hot spark, which gives an excellent chance of igniting the fuel-air mixture at reasonably high altitudes. Another benefit of the high-energy ignition system, is that fouling of the ignitior plugs is minimal.

Figure 3.10-7 Ignition System

IGNITOR PLUGS

The electrode of a gas turbine engine ignitor plug must be able to accommodate a current of much higher energy than the electrode of conventional spark plugs. The high energy current causes more rapid ignitor-electrode erosion than that encountered in reciprocating engine spark plugs. Although this is a reason for not operating gas turbine ignition systems any longer than is absolutely necessary, this erosion factor is greatly reduced due to the relatively short time that a turbine engine ignition system is in operation. Figure 3.10-8 shows a typical ignitor plug.

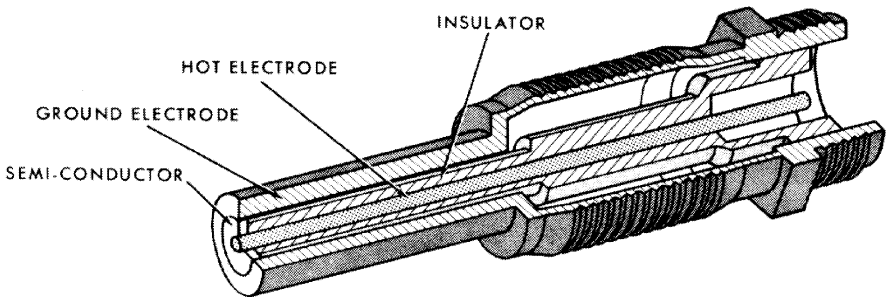

Figure 3.10-8 Typical Ignitor Plug

Normally, a gas turbine engine is provided with two ignitor plugs, sometimes called spark ignitors. In the case of can-type and can-annular-type burner chambers, the plugs are located in separate chambers. Ignitor plugs serve a similar purpose to spark plugs in a reciprocating engine, but, unlike a reciprocating engine, operation of the ignition system and the ignitor plugs is only necessary for a short period during the engine starting cycle.

The combustion chambers of can-type and can-annular-type gas turbine engines are interconnected by flame tubes (flame propagation tube) so that a flame started in one chamber will spread rapidly to the others. Annular-type chambers do not need such an arrangement.

Most ignitor plugs are of the annular-gap type (Figure 3.10-9), although constrained-gap plugs are used in some engines. The **annular-gap** plug protrudes slightly into the combustion chamber liner to provide an effective spark. The spark of the **constrained-gap** plug (Figure 3.10-8) does not closely follow the face of the plug. Instead, it tends to jump in an arc which carries it beyond the face of the chamber liner. Consequently, the constrained-gap plug operates at a cooler temperature than that of the annular-gap plug.

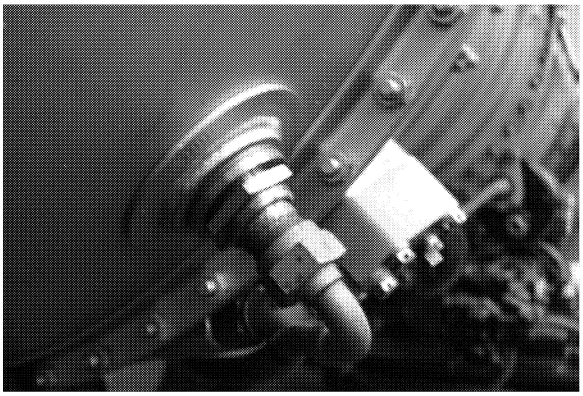

Figure 3.10-9 Ignitor Plug

STUDY QUESTIONS

Accessory, Starter, and Ignition systems

1. What is the start sequence?

2. What are the different types of starters?

3. Which starter is commonly used on smaller gas generator engines?

4. What are some uses for compressor discharge air?

5. Where would you find the hottest air: the high or low pressure compressor?

6. In a dual spool axial flow engine, which compressor would provide bleed air for anti-ice protection?

7. What are some mechanically-driven accessories?

8. Why do you want the starter to remain engaged after you've reached self-accelerating speed?

9. What is the most common type of large gas generator starter?

10. How does an air turbine starter work?

11. What type of ignitor plugs are used in gas turbine engine ignition systems?

12. What causes the flame to spread between combustion chambers in can or can-annular designs?

13. How many ignitor plugs does each engine utilize?

(This page intentionally left blank)

APPENDIX

Answers to Study Questions
Appendix 3.A

Answers to Topic 3.1 Study Questions

1. Together they make up total pressure.

2. Convergent: velocity increases and pressure decreases.
Divergent: velocity decreases and pressure increases.

3. Divergent: velocity increases and pressure decreases.
Convergent: velocity decreases and pressure increases

4. Nozzle: velocity increases and pressure decreases.
Diffuser: velocity decreases and pressure increases.

5. Compressor, burner, turbine.

6. By rapidly compressing, heating and accelerating a large quantity (mass) of air and fuel.

7. Brayton Cycle.

8. Compressor: Remains fairly constant. Burner and turbine: Increases.

9. Thrust measured at exhaust at standard day conditions 29.92 and 15 °C.

10. Thrust measured under normal flight conditions.

11. When aircraft is in a static position and standard day conditions.

12. Temperature, pressure, and altitude.

13. Thrust decreases.

14. Thrust decreases.

15. Thrust decreases.

16. Temperature and pressure both decrease with an overall decrease in thrust.

17. Approximately 36,000=, temperature remains isothermal.

18. Airspeed increase without ram effect causes thrust to decrease.
Airspeed increase with ram effect causes thrust to remain relatively constant at subsonic speeds and increased greatly at supersonic speeds.

Answers to Topic 3.2 Study Questions

1. Acts as a diffuser and provides a turbulent-free supply of air to the face of the compressor.

2. Smooth out turbulent airflow.

3. Simplest and most effective at providing smooth airflow.

4. Divergent, decrease velocity / increase pressure.

5. Convergent/Divergent, decrease velocity / increase pressure.

6. To allow a supersonic aircraft to fly in all flight regimes (supersonic and subsonic).

7. See pages 3.2-10, 3.2-13

8. Impeller - increase velocity, pressure and total pressure.
Diffuser - decrease velocity, increase pressure.
Manifold - route air mass to the burner.

9. Rotors, stators

10. The cross sectional area decreases within the compressor from fore to aft to allow the velocity to remain fairly constant as pressure increases. Therefore, the rotor and stator length requirements will decrease.

11. Redirect the airflow.

12. Final decrease in velocity, and increase in pressure prior to combustion.

13. Two separate compressors, driven by its own turbine, to obtain higher compressor ratios.

14. In the burner.

15. Minimum pressure loss. 2. High combustion efficiency. 3. Flame must not blow out. 4. Contain the total combustion process.

16. Can - ease of maintenance, cause cold spots on turbine.
Annular- even heat, complicated maintenance.
Can-annular - even heat, ease of maintenance, expensive.

17. Primary air = 25% mixes fuel for combustion
Secondary air = 75% cooling and flame control

18. To turn the compressor and accessories.

19. 75% of the total heat energy produced prior to the turbine section.

20. Stators and rotors.

21. Turbine blade elongation and deformation.

22. To increase velocity and decrease turbulence.

23. Subsonic - convergent, supersonic - convergent/divergent. Both will maximize the increase in velocity at the expense of pressure.

24. Spray bars, flame holder, screech liner, variable exhaust nozzle.

25. Secondary air from burner section along with bypassed air (turbofan) is mixed with fuel and ignited in the afterburner duct to augment thrust.

26. The more fuel introduced, the more thrust produced.

27. Spray bars spray fuel. Flame holders hold the flame and they create local turbulence (eddies) to enable a better fuel/air mixture for combustion.

28. It acts as a shock absorber to guard against pressure fluctuations or cyclic vibrations sometimes associated with AB.

29. Exhaust nozzle.

Answers to Topic 3.3 Study Questions

1. Mild pulsations, engine vibration, loud bangs, drop in RPMs, rise in turbine temperature.

2. Excessive compressor blade AOA.

3. Airflow distortions.

4. The angle between the chord line of the rotors and the relative wind. The relative wind is comprised of the inlet airflow and the compressor RPM.

5. Abrupt attitude change or flight through turbulent air.

6. Adversely due to compressor blade deformation.

7. Fuel Control Unit (FCU).

8. (Only applies to variable exhaust nozzle) it could fail to open, causing a back pressure and reverse flow back through the compressor.

9. Incorporating Split-spool compressor, bleed air valves, variable inlet guide vanes, and variable exhaust nozzle.

10. Avoid rapid and unnecessary PCL movements. Maintain at least minimum prescribed airspeeds.

11. Execute engine failure procedures.

Answers to Topic 3.4 Study Questions

1. An engine which is operated by converting the energy of expanding gases into propulsive force.

2. Inlet, compressor, burner, turbine, exhaust nozzle.

3. By greatly accelerating a small mass of air and expanding the gases leaving the exhaust nozzle.

4. Best high speed and high altitude performance. Highest TSFC. Longest takeoff rolls.

5. Fan, compressor, burner, turbine, exhaust nozzle.

6. Fan pushes a large mass of air and provides 30-60% of the total thrust.

7. 30-60% from the fan.
40-70% from the gas generator exhaust gases.

8. Airflow from the fan "bypassed around the gas generator."

9. 1. Better TSFC than a turbojet, shorter take off distance, can lift larger weights.
2. Large frontal area, slower, and can not fly as high as turbojet.

Answers to Topic 3.5 Study Questions

1. Gas generator with a reduction gearbox, torquemeter assembly, and a propeller assembly.

2. Prop (90% of total thrust)

3. To keep the blade tips subsonic. Converts high RPM / low torque to low RPM / high torque.

4. 10%.

5. Advantages: low TSFC, high thrust at low airspeed, able to carry more load requiring short runways.
   Disadvantages: Heavier and more complicated, limited to 450 knots.

6. Gas turbine with a free air/power turbine.

7. A turbine that is not mechanically connected to the compressor and aft of the gas generator turbines.

8. Gas generator: Provides exhaust gas to drive the free/power turbine.
   Free/power turbine: Connected to the main transmission, it converts the heat energy to mechanical energy to drive the rotors.

9. Negligible

Answers to Topic 3.6 Study Questions

1. Pressure applied to an enclosed or confined liquid is transmitted equally in all directions without loss and acts with equal force on equal surfaces.

2. 3,000 psi.

3. Force.

4. Linear

5. Constant displacement and variable displacement pumps.

6. Store fluid, trap impurities, dissipate heat, purge air bubbles.

7. Used with the constant displacement pump. Regulates the system pressure to normal limits.

8. System shock absorber, supplements system pressure during peak operations, one time emergency use.

9. Ensure one way fluid flow.

10. Redirects the flow of fluid for system operation.

11. As a safety backup in case of over-pressurization of the hydraulic system.

12. Reverse the flow of hydraulic fluid, changing the direction of travel to the actuator.

13. Helps guard against leaks by isolating a parts of the system.

14. Converts fluid energy into mechanical motion.

Answers to Topic 3.7 Study Questions

1. AC and DC.

2. AC generators and inverters.

3. DC from an AC input.

4. CSD (constant speed drive).

5. AC or DC, depending on generator type.

6. Emergency power or power during ground operations.

7. Essential bus.

8. Bus.

9. Essential bus - safety of flight; Primary bus- mission equipment; Monitor/ Secondary bus- convenience items Starter bus - starting circuits

10. Circuit breakers. Circuit breakers and switches.

11. Warning lights

12. AC generator

13. DC and AC essential buses

14. External DC power, internal battery or APU.

15. DC essential bus.

Answers to Topic 3.8 Study Questions

1. Volatility

2. The minimum temperature at which a combustible liquid emits a sufficient quantity of vapor that ignition will occur during a momentary application of a flame.

3. JP-5, less volatile, higher flashpoint.

4. Increase the volatility. Flashpoint always remains constant.

5. 1. Operation at low atmospheric pressures. 2. Complexity of the piping system. 3. Cold weather starting. 4. High fuel flow pressure.

6. The FCU

7. Through the PCL

8. 1. PCL inputs. 2. Compressor inlet temperature. 3. Compressor rpm (high-pressure RPM in dual spool). 4. Turbine inlet temperature.

9. Pilot controls amount of fuel supplied to the burner and the rate of application. Pilot must monitor the engine's critical limits.

10. To avoid vapor lock or engine fuel pump cavitation.

11. Sends a pressure signal to close the dump valve closed; Dump valve open, Pressurizing valve closed.
dump valve. Schedules fuel flow for start.

12. Both closed; Pressurizing valve open,

13. The FCU

14. After the FCU

15. The maximum thrust for a specified limited period of time (30 minutes).

16. Afterburner fuel control unit

Answers to Topic 3.9 Study Questions

1. It is better suited for high temperatures.

2. They effectively dissipate heat.

3. MIL-L-23699

4. (1) Stability at high temperatures
(2) less coke/lacquer deposits.

5. No, causes a sticky mass when mixed and poor lubricating qualities.

6. (A) Metallic particles, carbon, sand, fuel, over age synthetic oil. (B) Metallic particles from engine wear.

7. Six months vs. indefinite.

8. To provide an adequate supply of clean oil to bearings and gears at the proper temperature and pressure.

9. Resistance to flow.

10. Temperature increases, viscosity decreases, and vice versa.

11. Wet - oil stored internally,
Dry - external oil tank.

12. The temperature/viscosity can be better regulated.

13. A weighted swivel outlet assembly.

14. To supply oil under pressure and scavenge oil.

15. To vent off excess fluid pressure.

16. After the oil pump. It can indicate a pump malfunction.

17. Ensures continuous oil supply to the engine in the event the filter becomes clogged

18. Fuel-oil heat exchanger and air-oil cooler.

19. Heat the fuel and cool the oil.

20. Yes, if the aircraft is designed with that component.

21. No.

22. No.

23. Pressure, Scavenge, and Breather Pressurizing.

24. Supplies oil under pressure to the engine main bearings and accessory drive gear.

25. Returns oil to the tank from the bearings and accessory section. Provides cooling for the oil.

26 1. At the entrance of the fuel-oil heat exchanger. 2. Thermostatically operated to direct flow of oil either through or past the heat exchanger.

27. Prior to entering the engine bearing compartments.

28. 1. On the fuel exit of the fuel-oil cooler.
2. Controls the operation of the air-oil cooler doors.

29. Ensures sea level pressure is maintained in the oil tank and scavenge subsystem to prevent oil leaks.

Answers to Topic 3.10 Study Questions

1. Compressor rpm, ignition, fuel

2. DC electric motor and air turbine

3. DC electric motor

4. To drive accessories, air conditioning and cabin pressurization

5. High pressure compressor

6. High pressure compressor

7. Generators, alternators and pumps

8. To decrease the potential of an abnormal start by reaching normal idle rpm rapidly

9. Air turbine starter

10. A small, geared, air turbine motor attached to the accessory drive gearbox that turns the accessory drive shaft and rotates the compressor

11. Annular-gap and constrained-gap

12. Flame propagation tubes

13. Two

(This page intentionally left blank)