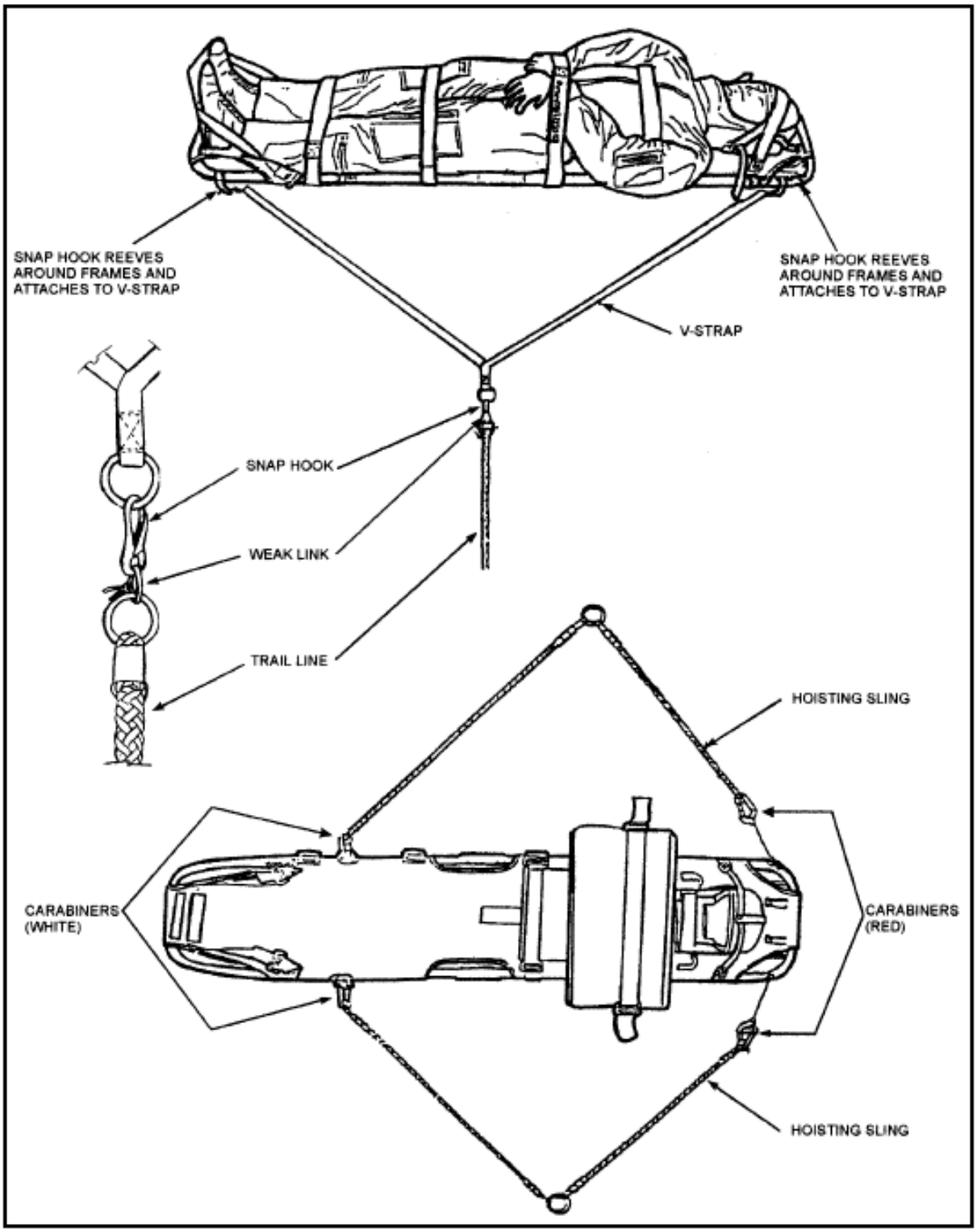DIAGRAM SHEET 4.3-5
SAR MEDEVAC LITTER W/ TRAIL LINE