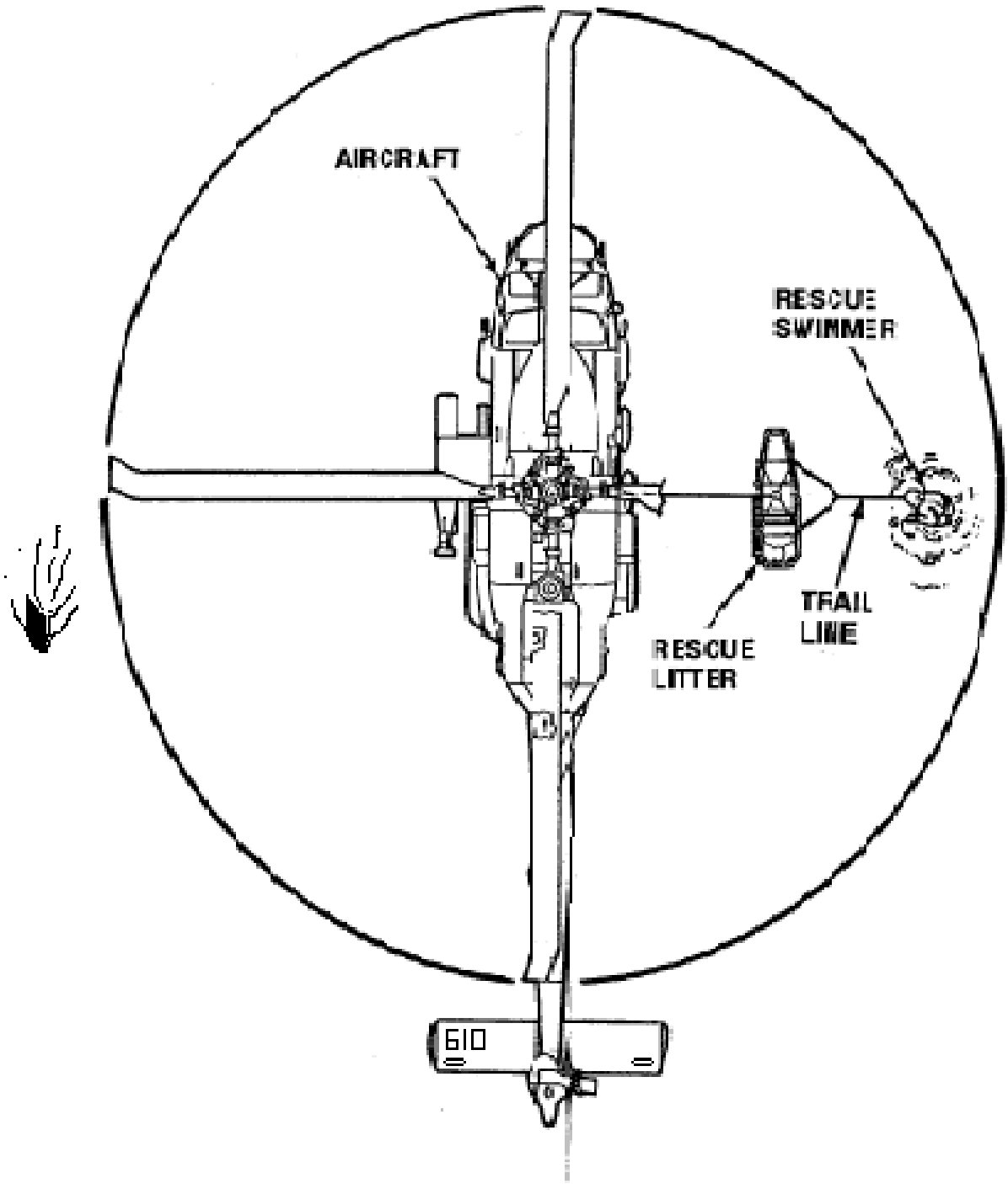DIAGRAM SHEET 4.3-9
RESCUE LITTER HOISTING (H-60)