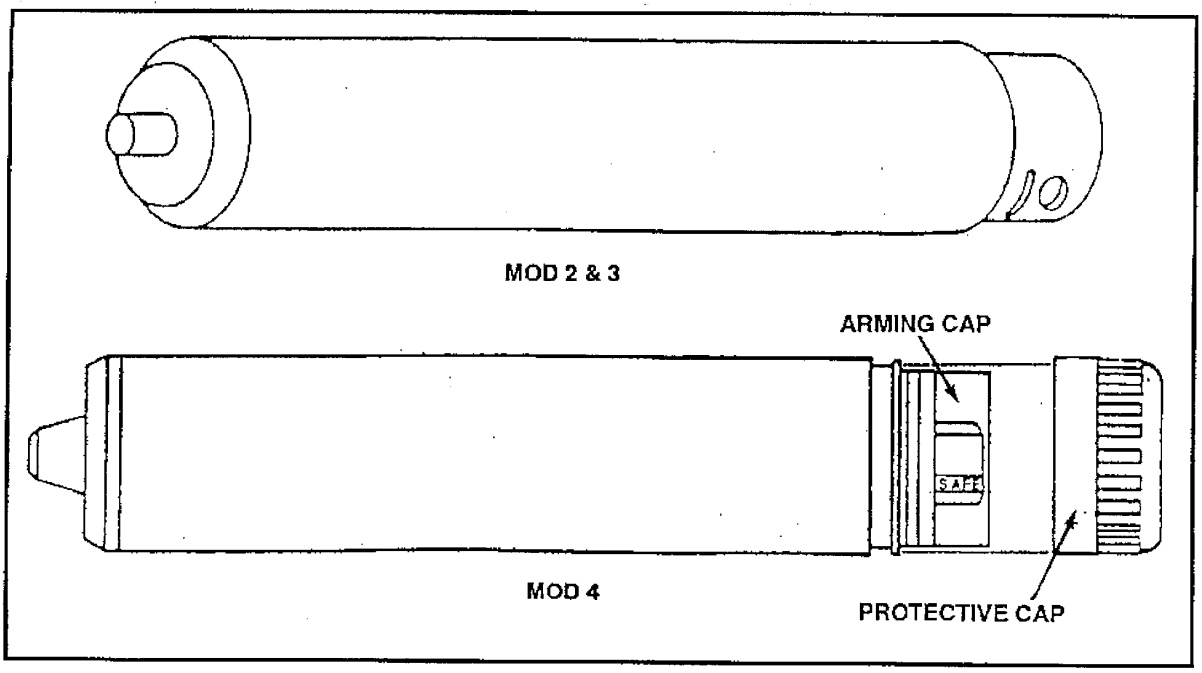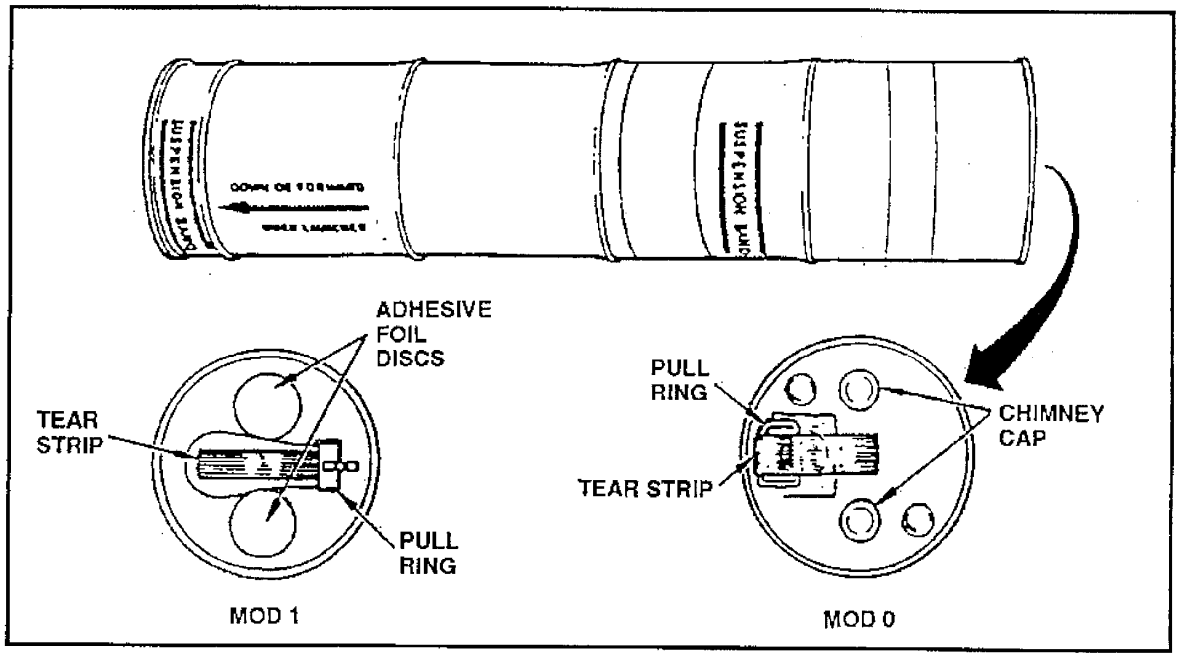DIAGRAM SHEET 4.6-1
MK-25 (TOP) AND MK-58 (BOTTOM)
MARINE LOCATION MARKERS