DIAGRAM SHEET 3.1-5
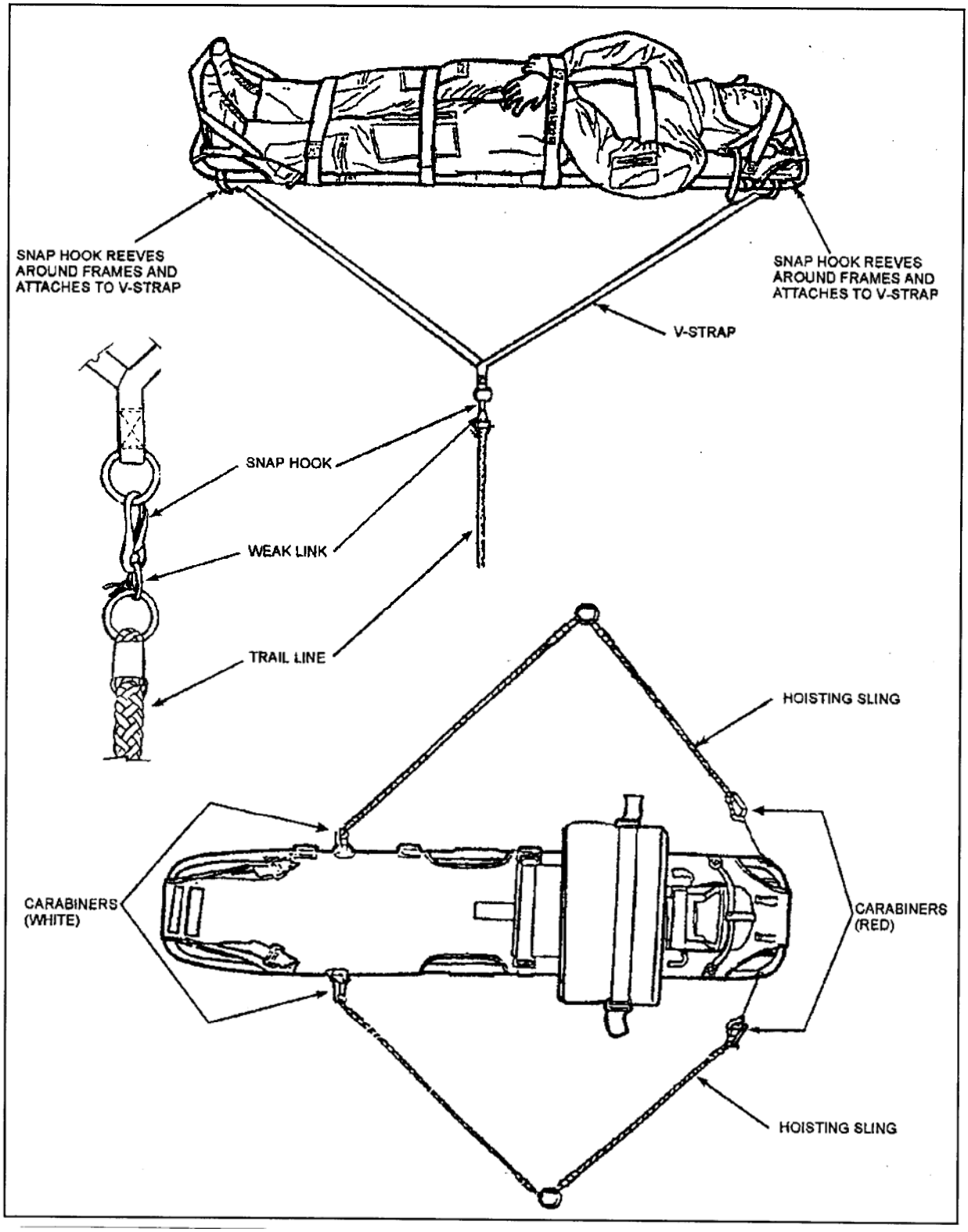
HOISTING SLING AND V-STRAP PAGE 1 of 1