DIAGRAM SHEET 3.2-1
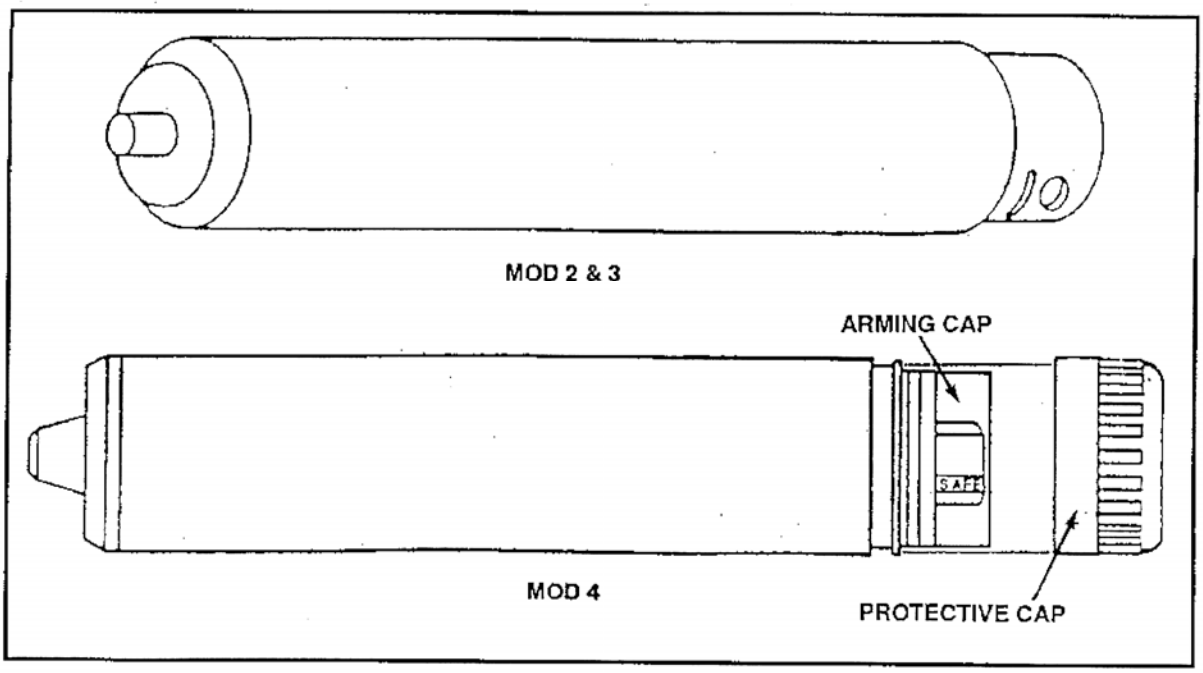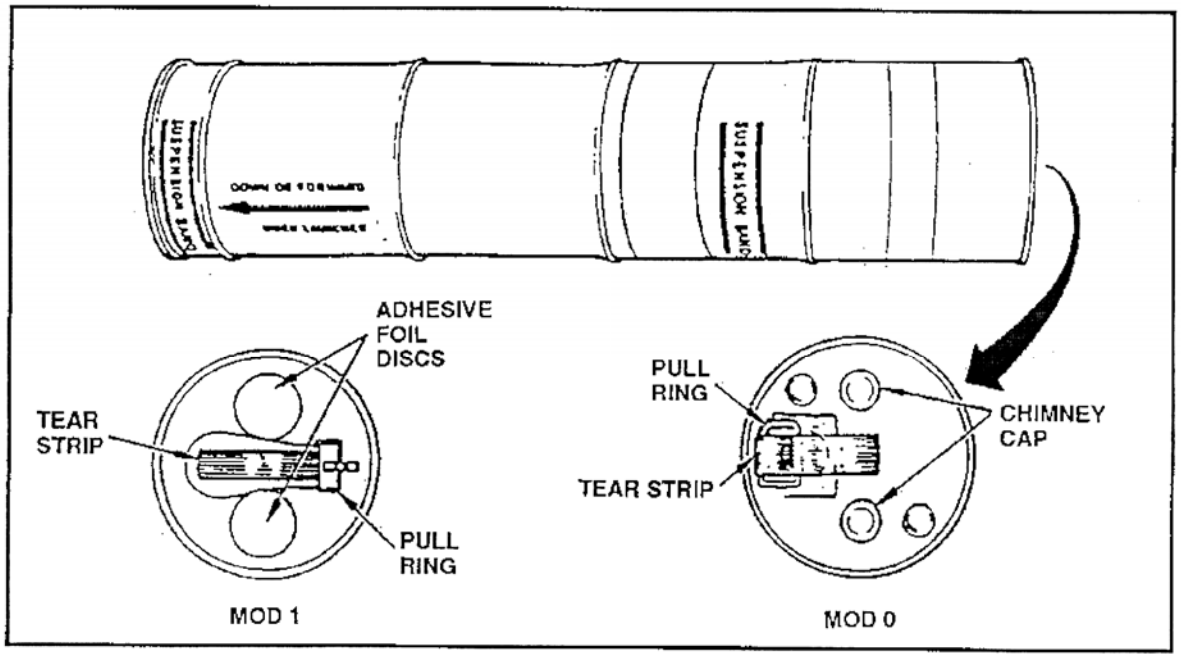
MK-25 (TOP) AND MK-58 (BOTTOM) MARINE LOCATION MARKERS PAGE 1 of 1